GUILD ◆ EDITION

1979 Celebrating 40 Years 2019

Woodsmith®

Woodsmith.com

Vol. 41 / No. 246

MAXIMIZE YOUR ROUTER TABLE WITH THE RIGHT FENCE!

Also:

Tune-Up Your Chisels for Better Performance

Tips & Tricks for Creating Perfectly Smooth Curves

Hand-Held CNC Router — A Look at the Shaper Origin

Woodsmith®

EDITOR Vincent Ancona
MULTIMEDIA EDITOR Phil Huber
ASSISTANT EDITORS Erich Lage, Logan Wittmer
CONTRIBUTING WRITER Bryan Nelson
EXECUTIVE ART DIRECTOR Todd Lambirth
SENIOR ILLUSTRATOR Dirk Ver Steeg
SENIOR GRAPHIC DESIGNERS Bob Zimmerman, Becky Kralicek
CONTRIBUTING ILLUSTRATOR Erich Lage

CREATIVE DIRECTOR Chris Fitch
PROJECT DESIGNER Dillon Baker
PROJECT DESIGNER/BUILDER John Doyle
CAD SPECIALIST Steve Johnson
SHOP CRAFTSMAN Marc Hopkins

CONTRIBUTING PHOTOGRAPHER Crayola England
SENIOR ELECTRONIC IMAGE SPECIALIST Allan Ruhnke

GROUP PUBLISHER Steven M. Nordmeyer
ADVERTISING DIRECTOR Don Schroder
610-821-4425
d.schroder@verizon.net
AD PRODUCTION COORDINATOR Kim Hoff
GROUP PRESIDENT Peter H. Miller

HOME GROUP
ACTIVE INTEREST MEDIA

Woodsmith® (ISSN 0164-4114) is published bimonthly by Cruz Bay Publishing, Inc., 2143 Grand Ave, Des Moines, IA 50312.
Woodsmith® is a registered trademark of Cruz Bay Publishing.

Copyright© 2019 Cruz Bay Publishing, Inc. An Active Interest Media Company. All rights reserved.

Subscriptions: Single copy: $6.95.
Canadian Subscriptions: Canada Post Agreement No. 40038201. Send change of address information to PO Box 881, Station Main, Markham, ON L3P 8M6. Canada BN 82564 2911
Periodicals Postage Paid at Des Moines, IA, and at additional offices.
Postmaster: Send change of address to *Woodsmith*, Box 37274,

Printed in U.S.A.

WoodsmithCustomerService.com

ONLINE SUBSCRIBER SERVICES

- **VIEW** your account information
- **PAY** your bill
- **RENEW** your subscription
- **CHANGE** your mailing or e-mail address

CUSTOMER SERVICE Phone: 800-333-5075 weekdays

SUBSCRIPTIONS
Customer Service
P.O. Box 842
Des Moines, IA 50304-9961
subscriptions@augusthome.com

EDITORIAL
Woodsmith Magazine
2143 Grand Avenue
Des Moines, IA 50312
woodsmith@woodsmith.com

ACTIVE INTEREST MEDIA

PRESIDENT & CEO **Andrew W. Clurman**
SENIOR VICE PRESIDENT, TREASURER & CFO **Michael Henry**
VICE PRESIDENT, AUDIENCE DEVELOPMENT **Tom Masterson**
VICE PRESIDENT, PRODUCTION & MANUFACTURING **Barb Van Sickle**
VICE PRESIDENT, PEOPLE & PLACES **JoAnn Thomas**
AIM BOARD CHAIR **Efrem Zimbalist III**

from the editor

Sawdust

As the decade draws to a close, there are a couple of new developments here at *Woodsmith* that I'd like to mention. The first is that earlier this year, Active Interest Media (the company that owns *Woodsmith*) purchased *Popular Woodworking* magazine. I've always admired *Popular Woodworking*, so when I first heard this news, my main question was whether we would keep the magazine afloat or combine it with *Woodsmith*. After much deliberation, the decision was made to keep the two magazines running separately. *Popular Woodworking* will continue on its path and we (*Woodsmith*) will continue on ours.

I met the editor of *Popular Woodworking*, Andrew Zoellner, in person a few weeks ago. In addition to being a passionate woodworker, Andrew is a sharp guy with a clear vision of where he sees *Popular Woodworking* headed in the future. So even though the two magazines will remain separate and distinct, I'm excited about the opportunity to collaborate in other areas. (Stay tuned for more on this subject.)

The second thing I'd like to announce is that our web design group is in the process of redesigning the *Woodsmith* website. The first phase has been completed to update the look and feel of the site. In the coming months, we'll be adding more in the way of content. If you'd like to have a look at the new site, you can check it out at *Woodsmith.com*.

Vince

STATEMENT OF OWNERSHIP, MANAGEMENT, AND CIRCULATION
(Required by 39 U.S.C. 3685)

1. Publication Title: *Woodsmith*. 2. Publication No.: 0164-4114 3. Filing Date: September 1, 2019. 4. Issue Frequency: Bimonthly. 5. No. of issues published annually: 6 (six). 6. Annual subscription price: $29.00. 7. Complete mailing address of known office of publication: 2143 Grand Avenue, Des Moines, (Polk County), Iowa 50312-5306. 8. Complete mailing address of the headquarters or general business offices of the publisher: 2143 Grand Avenue, Des Moines, (Polk County), Iowa 50312-5306. 9. Full names and complete mailing addresses of publisher, editor, and managing editor: Publisher: Cruz Bay Publishing, 2143 Grand Avenue, Des Moines, Iowa 50312; Editor: Vincent Ancona, 2143 Grand Avenue, Des Moines, Iowa 50312; Managing Editor: Vincent Ancona, 2143 Grand Avenue, Des Moines, Iowa 50312. 10. Owner: Cruz Bay Publishing, 300 N. Continental Blvd, Suite 650, El Segundo, CA 90245. 11. Known bondholders, mortgagees, and other security holders owning 1 percent or more of total amount of bonds, mortgages or other securities: None. 12. (Does not apply.) 13. Publication Title: *Woodsmith*. 14. Issue Date for Circulation Data Below: August/September 2019 15. Extent and nature of circulation:

	Average no. copies each issue during preceding 12 months	Average no. copies of single issue published nearest to filing date
A. Total number of copies (net press run)	171,892	165,231
B. Paid circulation (by mail and outside the mail):		
1. Paid/requested outside-county mail subscriptions stated on PS Form 3541	127,080	122,487
2. Mailed in-county paid subscriptions stated on PS Form 3541	0	0
3. Paid distrib. outside the mails (sales through dealers/carriers, street vendors, counter sales, and other paid distrib. outside USPS)	6,491	7,269
4. Paid distribution by other classes of mail through the USPS	0	0
C. Total paid distribution	133,571	129,756
D. Free or nominal rate distribution (by mail and outside the mail)		
1. Free or nominal rate outside-county copies included on PS form 3541	1,786	2,059
2. Free or nominal rate in-county copies included on PS Form 3541	0	0
3. Free or nominal rate copies mailed at other classes through the USPS	0	0
4. Free or nominal rate distribution outside the mail (carriers or other means)	0	0
E. Total free or nominal rate distribution	1,786	2,059
F. Total distribution	135,357	131,815
G. Copies not distributed	36,535	33,416
H. Total	171,892	165,231
I. Percentage paid and/or requested circulation	98.68%	98.44%
16. Electronic Copy Circulation; Woodsmith		
A. Paid Electronic Copies	608	561
B. Total paid print copies + paid electronic copies	134,179	130,317
C. Total print distribution + paid electronic copies	135,965	132,376
D. Percentage paid (both print and electronic copies)	98.69%	98.44%

I certify that 50% of all my distribution copies (electronic and print) are paid above a nominal price.
17. Publication of Statement of Ownership. Will be printed in the Dec./Jan. 2020 (#246) issue of this publication.
18. I certify that all information furnished on this form is true and complete. (signed) Vincent Ancona, Editor

On occasion, we allow companies whose products and services may be of interest to you to send advertising mail to our subscribers. We are careful to choose ethical companies that have information of genuine interest to our subscribers. Most of our subscribers appreciate these materials. However, if you prefer to have your name deleted from the mailing list made available to other companies, please write to us at Woodsmith, 2143 Grand Avenue, Des Moines, IA 50312

contents

No. 246 December/January 2020

Projects

weekend project

Coaster Set 22

A simple router jig is the secret to making the lattice-like patterns in these coasters. And once you have everything set up, the process is almost automatic.

shop project

Router Plane 28

Despite its look, this is no Mickey-Mouse project. This shop-built router plane is sure to become a favorite tool in your shop, and one that will get used often.

designer project

Standing Mirror 32

The front of this floor-standing mirror opens to reveal storage compartments for jewelry, scarves, or other accessories. And the mirror tilts for the optimum viewing angle.

gift project

Candle Centerpiece. 40

A block of wood and a couple of hours of shop time are all you need to build this attractive candle centerpiece. It makes a great last-minute gift idea.

heirloom project

Welsh Stick Chair 44

Building a chair is no small feat. We've kept the design of this folk-style chair simple enough to make it approachable, while still giving you the full chair-making experience.

contents
CONTINUED

Departments

Reader Feedback 5

from our readers
Tips & Techniques 6

great gear
Shaper Origin 10
We take this handheld CNC router for a spin in our shop. Find out how it operates and what it's capable of.

router workshop
Router Table Fence Options 14
The fence makes or breaks a router table. Learn what your options are in terms of different fence styles.

all about
Gloves in the Shop 18
Protecting your hands while working in the shop is a serious matter. Here are some of the best ways to do that.

woodworking technique
Smooth Curves 56
Creating smooth, elegant curves is a simple process once you're familiar with the steps involved.

working with tools
Setting Up Your Chisels 58
Here's a reliable method to get the best performance out of your chisels, whether they're used or new.

mastering the table saw
Making Round Cuts. 62
Impress your woodworking friends with these techniques for making round cuts on the table saw.

Q&A 64

READER Feedback

Laws of Physics

We know that rubbing two objects together produces heat, and we know that the longer we rub, the more heat we produce. In the article on glue line rip blades (Issue 243, page 65) it is stated that feeding the board slower will help prevent burns. How is it that they have been able to change physics? I have good experience showing that the faster I push the board through, the less burn I get.

Dwight Kauffman
Harrisonburg, VA

Contributing Writer Wyatt Myers replies: *You are of course correct that feeding a workpiece through the saw too slowly can result in burning. In the article I said, "feed the stock through at a smooth, steady rate, slower than you would with a standard blade." There are actually two issues at play here — burning and smoothness of cut. Feeding the workpiece through at a consistent, steady rate will help avoid burning. Slowing the feed rate down (compared to that of a standard rip blade) will give you a smoother cut.*

Door Hanging Advice

With reference to your article on building and hanging a new entry door (Issue 244, page 24), a 2°-3° bevel is usually all you need to avoid any binding on the stop. 5° is getting pretty extreme and probably creating more of a gap than you want.

David A. Beegle
Builders Daily Solutions Inc.

CNC Not For Everyone

I seldom read the Feedback section of the magazine, but Ray Weimer's comments in Issue 244 really hit home. I have been a subscriber for more years than I can recall but due to a hip replacement seven days ago, I cannot get out to the shop to see what my oldest *Woodsmith* issue is.

I have to agree with Ray. I'd like to know how many readers built a CNC router. Projects like that weigh heavily on my decision to no longer subscribe once my current subscription is over.

Andrew Pensavalle
Bullhead City, AZ

Editor Vincent Ancona replies: *We've had more response on the CNC router project (both positive and negative) than on any other project that we've done in Woodsmith for a long time.*

I understand that the CNC router is a project that does not appeal to everyone. You can rest assured that this does not signal a radical shift in the overall focus of Woodsmith. We will continue to provide the type of traditional woodworking projects and techniques that we always have.

That being said, we also have a duty to cover new developments in woodworking. So from time to time, in between discussions on table saws and routers, you may see an occasional article on newer aspects of woodworking (such as the article on the Shaper Origin on page 10).

A "Divided" Opinion

I was excited to see your article on compasses and dividers (Issue 244, page 10). There are so many uses in the shop for these tools and a little Euclidean geometry. I was hoping to learn some new tricks. Instead, we got the preschool version. The article is a total whiff for anybody who already uses dividers. For people who don't use dividers and compasses, the article didn't really present a good argument for introducing them into the shop.

Dave Spitler
La Grange, KY

You may email comments to *Editor@Woodsmith.com*. Please include your first and last name, city, and state. Comments may be edited for length or clarity.

Woodsmith SHOP

Iowa Public Television Iptv.org
Sponsoring Station

RIKON Kreg Old Masters Since 1953
Major Program Underwriters

Titebond®
Additional Funding

Renewable Push Block

After years of making throw away push blocks for my table saw, I decided I wanted to make a forever push block. It needed to be more stable while in use, and have a replacable base once it gets chewed up. The design I came up with has components that do that and is adjustable for different thicknesses of stock.

DOVETAILED INSERTS. The push block has two sacrificial parts, one on the bottom and one on the back. The heel pushes the stock and has a slot cut in it for a studded knob. The knob can be used to adjust the heel for different thicknesses of stock.

The base and heel are dovetailed onto the handle and slide off for easy replacement. When I make these parts, I always make a couple of feet worth so I can quickly replace them when they get chewed up.

Bill O'Sullivan
Powell, Ohio

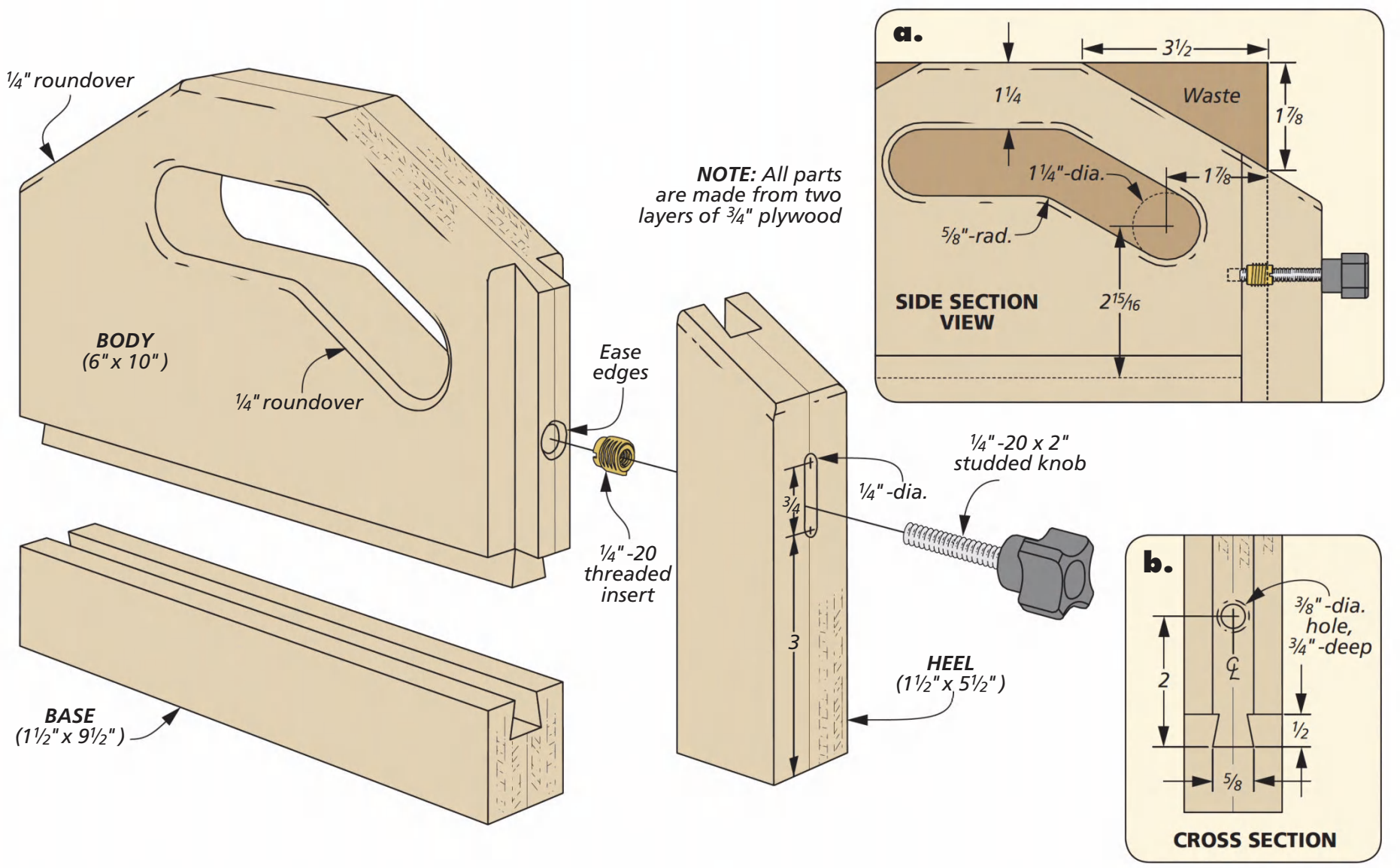

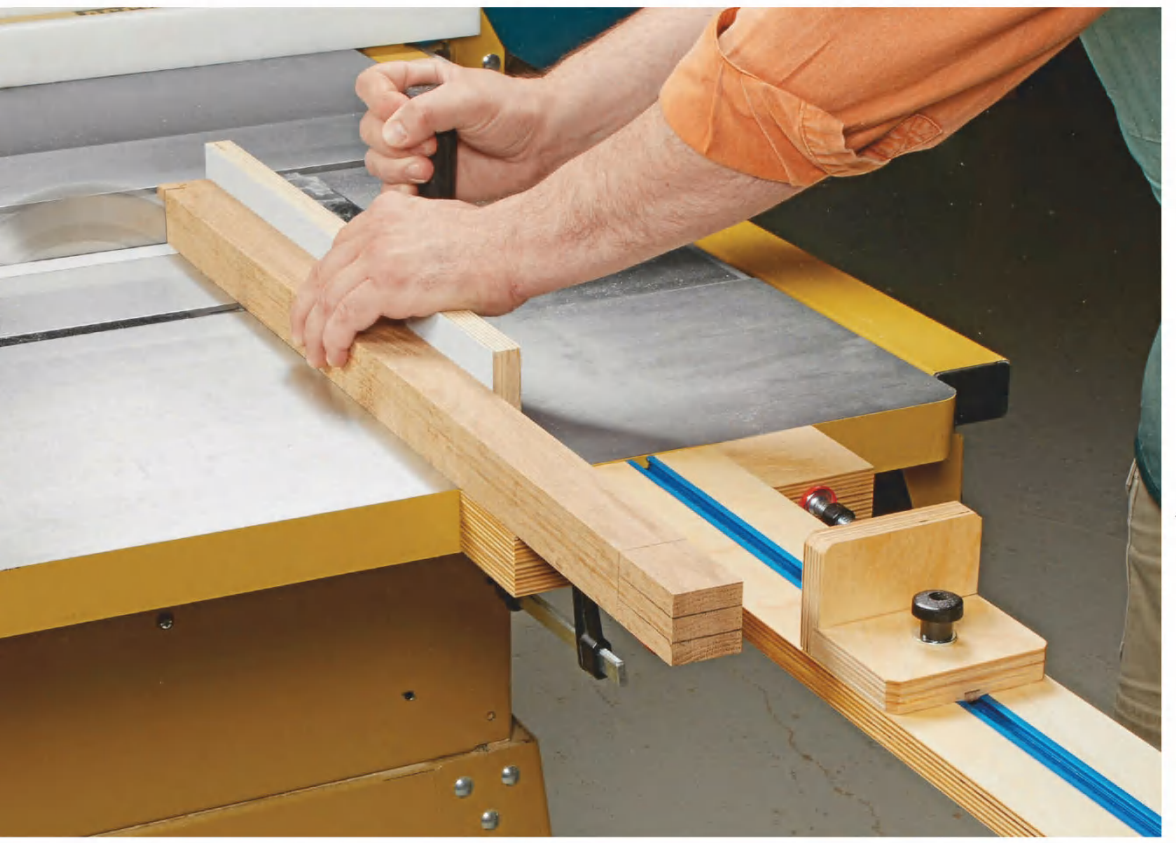

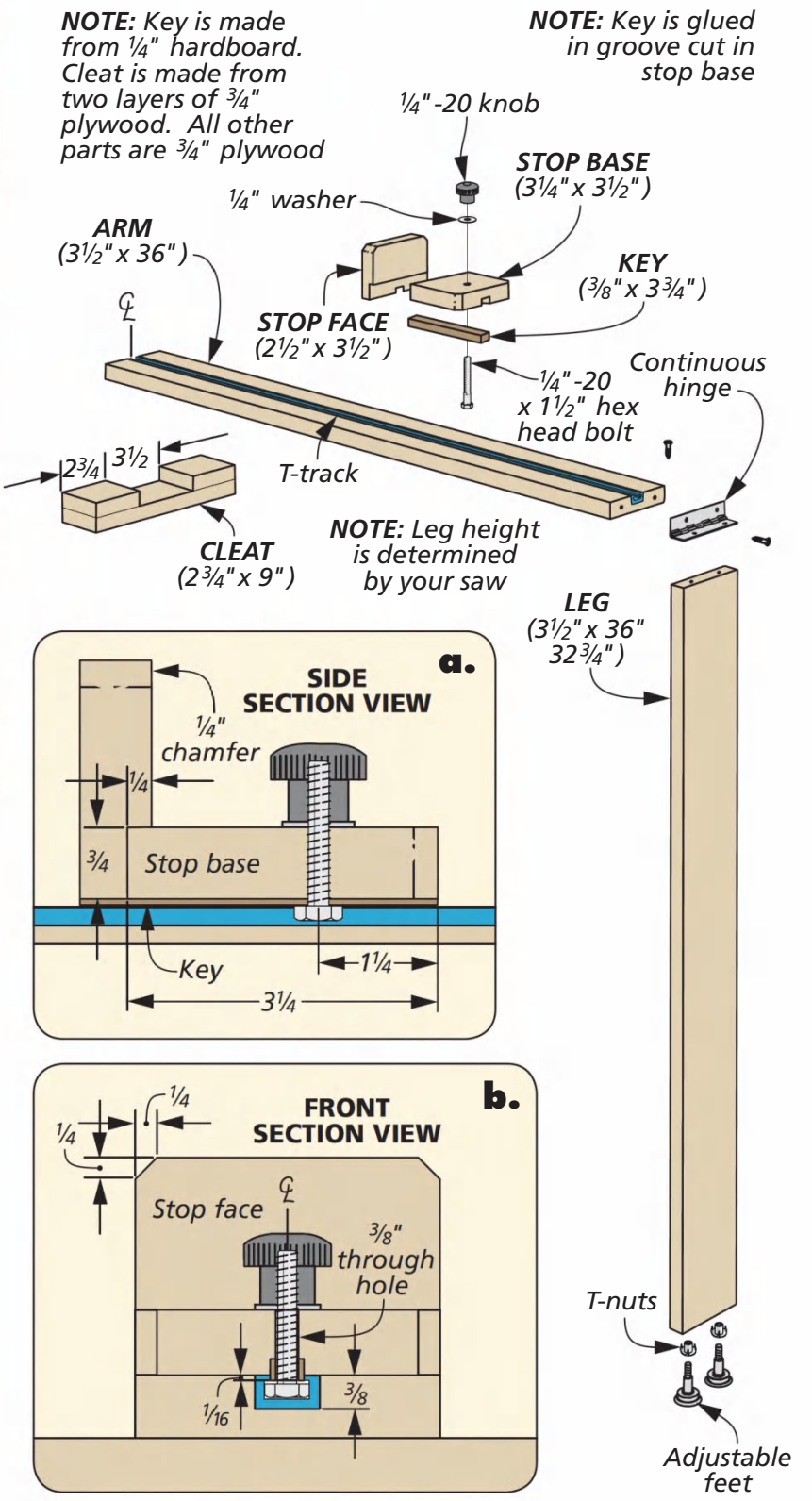

Table Saw Length Stop

In my shop, I prefer to cut workpieces to length at the table saw. When I need to make multiple parts, I often use a block on my rip fence as a stop. When a project called for parts that were longer than my rip fence allowed, I built the fixture shown here.

SAW EXTENSION. My fixture consists of an arm with a T-track. A sliding stop block fits in the T-track and is held in place with a knob. To support the end of the extension, I added a leg on a hinge. The entire fixture is attached to the saw using a pair of clamps and can quickly be removed when it's not in use.

Using the stop block is pretty simple. I use a tape measure to set the stop block in the correct position and lock it in place. Then, I can make my cut by sliding the workpiece against the stop block. If I need to remove the stop block for any reason, it simply slides off the end of the T-track.

Michael Behrmann
Lampe, Missouri

SUBMIT A TIP TO WIN

GO ONLINE

If you have an original shop tip, we would like to hear from you and consider publishing your tip in one or more of our publications. So jump online and go to:

SubmitWoodsmithTips.com

You'll be able to tell us all about your tip and upload your photos and drawings. You can also mail your tips to "Woodsmith Tips" at the editorial address shown on page 2. We will pay up to $200 if we publish your tip.

THE WINNER!

Congratulations to
Bill O'Sullivan, the winner of
a $100 *Lee Valley* gift card.

Illustrations: Becky Kralicek

QUICK TIPS

Prevent Splitting. *Henry Scotts* of *San Antonio, TX* uses a lot of threaded inserts in the edges of plywood. To avoid splitting the workpiece, Henry waxes the insert and also uses a clamp across the edge of the workpiece. This way, he can install the inserts with no problems.

Sizing Peg Hooks. *Ryan Maurer* of *Marion, MA* found that when changing pegboard sizes, his old pegboard hooks were a loose fit in the new pegboard. To solve the problem, he uses plastic dip on the hooks. This increases the size and makes them fit in the new pegboard much better.

Shooting Plane Grip. *Charles Mak of Calgary, Alberta* often uses his jack plane as a shooting plane. When doing a lot of shooting, he decided he needed an easier way to hold onto the plane. For a quick, temporary shooting plane handle, Charles attached a C-clamp on the side.

Pencil Pockets. *Terry Brecht from Marengo, IA* had a problem keeping track of pencils in his shop. To solve this common, and aggravating problem, Terry used a pocket hole jig to drill holes in several wood blocks. That way, he can station the blocks around his shop and always have a pencil handy.

A fitting at the bottom of the shelter captures a majority of the dust.

Dust Shelter

My miter saw is one of my primary power tools. The biggest complaint I have is the amount of dust that it creates. The dust collection that came with the saw doesn't work very well. So, I came up with the dust collection solution shown above.

DUST SHELTER. My solution utilizes a small pop-up style spray finishing shroud. But you could use any sort of pop-up tent (like a child's play tent). I installed a dust collection fitting on the bottom of the shelter to hook to my dust collector. To seal the fitting to the shelter, I simply screw it to a layer of plywood. Then, I can place the shelter unit on sawhorses.

With the shelter set up, I place my miter saw in the opening. Then, after turning on my dust collector, I can make my cuts. The shelter captures the saw dust, while the dust collector removes it.

Ron Stachelek
Dudley, Massachusetts

Straightedge Jointer

In my shop, I don't have a jointer. So, when I need to get a straight edge on a piece of stock, I have to get a little creative. One of the easiest ways I found was to use my table saw with a modified straightedge guide, like you see above.

A MODIFICATION. To use my straightedge guide, I modified the clamping foot. I trimmed the plastic off one side so there was a continuous straightedge that I could run up against the fence. Then, to use it, I clamp it on the board and guide the now straight, flush edge against the fence on the table saw. This leaves me with a straight edge on the opposite edge of the board.

C.R. Davis
Crossett, Arkansas

DIGITAL WOODSMITH

RECEIVE FREE ETIPS BY EMAIL

Now you can have the best time-saving secrets, solutions, and techniques sent directly to your email inbox. Simply go to:

Woodsmith.com
and click on,

Woodsmith eTips

You'll receive one of our favorite tips by email each and every week.

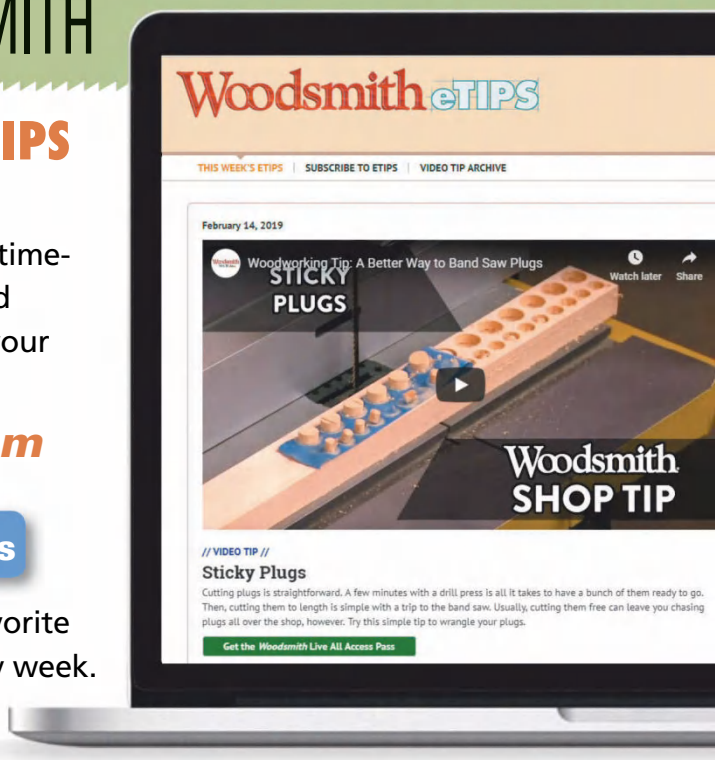

CNC with the Shaper Origin

CNC machines are finding their way into more and more home shops. But, what if you want to add one, but you don't have the room? Enter stage left — the *Origin* from *Shaper Tools*.

Origin combines a 3-axis router motor and a small computer. This means that *Origin* looks, and operates, much like a handheld router. But the on-board computer is constantly moving the motor and bit to keep you on a pre-determined tool path. Can't believe it? Neither could I. That is, until I tried it out.

Written by: Logan Wittmer

As you can see in the photo at right, the *Origin* looks similar to a handheld router. There's a router body that's held in a movable frame, or gantry, and it's connected to a base that has two handles and a touch screen. The router comes in a plastic case with a set of tools, a few bits, a dust collection shield and hose, and some roles of domino tape (more on this later).

HOW IT WORKS. Using *Origin* is significantly easier than you might think. *Origin* uses a camera to read the domino tape that you pre-apply to the worksurface and creates a virtual work area. The screen displays an image of your programmed tool path on the virtual work area (main photo at left).

As you move the router, following the screen, the gantry adjusts the position of the bit any time you stray from the line. The gantry has the ability to correct for up to a ¼" of movement in every direction. If you get too far off the path, the motor will retract the bit, leaving hardly a trace. The result is a highly accurate cut that is CNC-quality.

USES OF THE ORIGIN. So, how would you put the *Origin* to work in your shop? Well, the *Origin* can tackle almost any task that a standard CNC can do, but without size constraints. The biggest thing to remember is that while it's guided and accurate, you still have to stand there and rout instead of setting it and walking away, like a CNC.

With *Origin*, you can cut out parts, perform inlay work (lower right photo), and even cut some simple joinery (lower left photo).

CREATING FILES. Creating files is simple for *Origin*. You create an SVG file on your computer and upload it to *ShaperHub*, an online library of projects. Then, the Wi-Fi connected router accesses the library to download the file. On the *Origin* screen, the file can be placed, scaled or rotated.

USER INTERFACE. The user interface (UI) is intuitive and pretty self explanatory. There are screens for scanning a worksurface, cutting, designing, and a few other settings. The design interface allows you to draw simple shapes on the fly, and the cutting screen is used once your file is in place.

▲ *Origin* comes with two rolls of domino tape, three router bits, a magnetic dust shield, a dust collection hose, and the plastic case.

▲ By using a vertical workstation jig (plans to build one are available on *ShaperHub*) to hold workpieces vertically, *Origin* can be used to cut common joinery, such as a mortise and tenon.

▲ The ability *Origin* has to make a variety of cuts, including inside, outside, and pocketing cuts, makes creating complicated inlays and marquetry work a simple task. You're limited only by the bit diameter.

MAKING CUTS

After you've created a file and uploaded it to the *ShaperHub*, you're almost ready to make a cut.

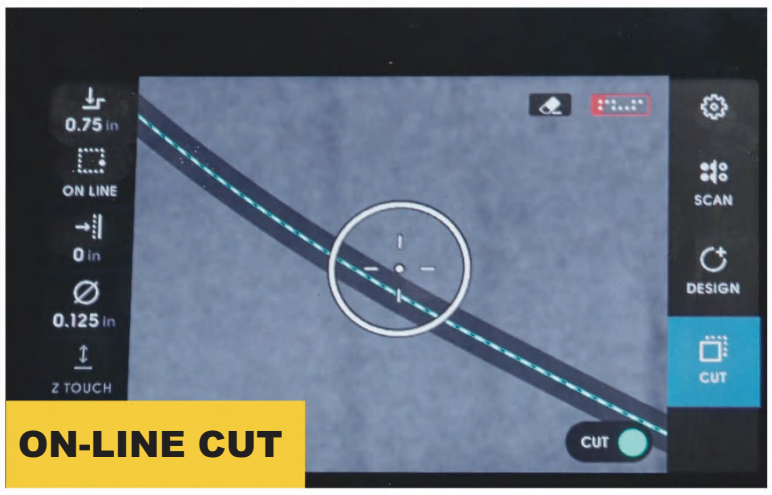

ON-LINE CUT

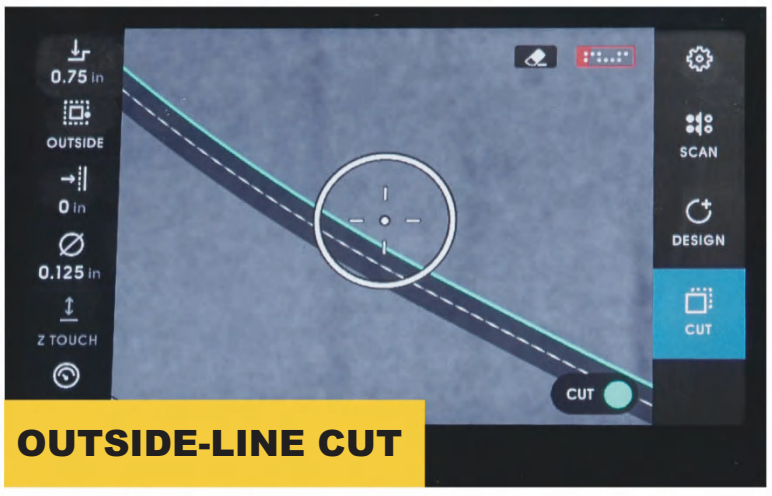

OUTSIDE-LINE CUT

INSIDE-LINE CUT

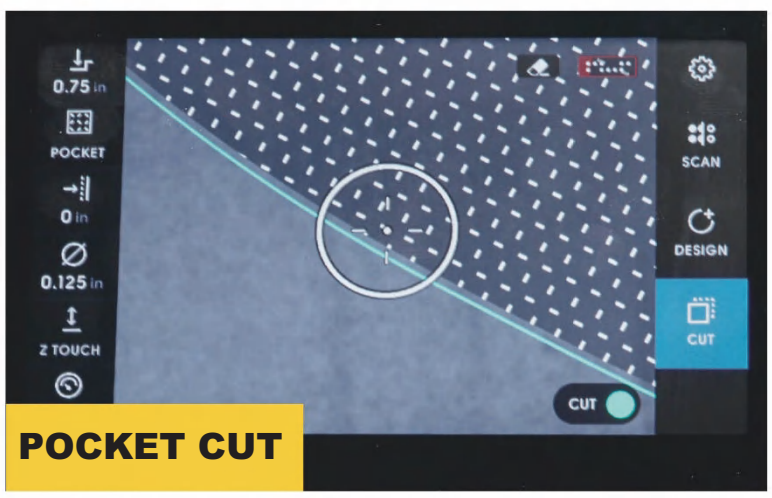

POCKET CUT

The touch screen on *Origin* allows you to see what type of cut you're going to be making before you ever turn the machine on and start to cut.

The key steps are outlined in the photos on the next page.

CREATE A WORKSPACE. The first thing to do is to apply tape to your workpiece. This requires laying out the strips of domino tape, approximately 3-4" inches apart (Photo 1). The dominos don't have to be in any order, and the strips of tape don't need to be parallel. A roll of tape costs about $18 and covers a sheet and a half of plywood.

SCAN THE WORKSURFACE. Next, you'll need to use the scan function to scan the worksurface into the *Origin*. This works like a panoramic photo using the camera. You'll see the domino tapes turn blue on screen as they become locked in the system's memory (Photo 2).

Once a workspace is created, that individual workpiece is stored in the system memory, as long as you don't move or remove the tape. It's worth noting that as you make a cut, you might get a warning that there's not enough tape visible on the worksurface. You can stop, apply more tape, and add to the existing scan before continuing.

PLACE ARTWORK. With the digital workspace created, you can select and import your artwork. *Origin* creates an image of the artwork and allows you to move the router around to place it on your workpiece (Photo 3). Using the touch screen, you can also scale and rotate the artwork as needed.

MAKE THE CUTS. Moving *Origin* around highlights different tool paths. If you get to a point where many paths are close together, you can use the "select" button on screen to cycle through and highlight different paths. Then, using the cut screen, you can choose the type of cut you'd like to make. Here is where you'll also set some parameters, such as bit diameter, bit offset (if needed), and depth of cut. There's also a button to zero out the Z-axis (bit height).

There are four basic cuts that you will use with the *Origin*. I talked about these a little bit earlier, and they're shown to the left with the bit's path in relation to the shape's outline.

ON-LINE. On-line cuts are generally used with the provided V-cutting bit. This guides the bit down the center of the artwork line. These are particularly useful for engraving letters or shapes on a worksurface.

OUTSIDE & INSIDE CUTS. Outside and inside cuts are used to cut with the bit offset either to the interior or the exterior of the artwork line. These are the primary cut types that you'll use. Outside cuts are used to cut out parts from a sheet, and inside cuts are used when performing inlays or prior to pocketing.

POCKETING. A pocket cut is used to rout a hollow inside the work area, such as an area for an inlay. You first need to make an inside cut, but then you can rout out the recess. It's important to note that, when routing the recess, the router and bit are not guided via the CNC function. They're only guided when you get close to the edge (it will keep you inside the shape). When routing the interior, you're free-hand routing via the screen.

ROUTING. At this point, you're ready to begin routing. After turning the router on, press the green button to lower the bit into the workpiece (it has to be held stationary as it plunges). On screen, the tool path has a dotted line that shows you the direction to rout.

As you move the router, you'll see a dot and pair of crosshairs inside a circle (designating the bit). The dot (bit) stays on the tool path, and you must keep it inside the circle— outside of it and the cutter will retract. During a cut, you can also hold down the green

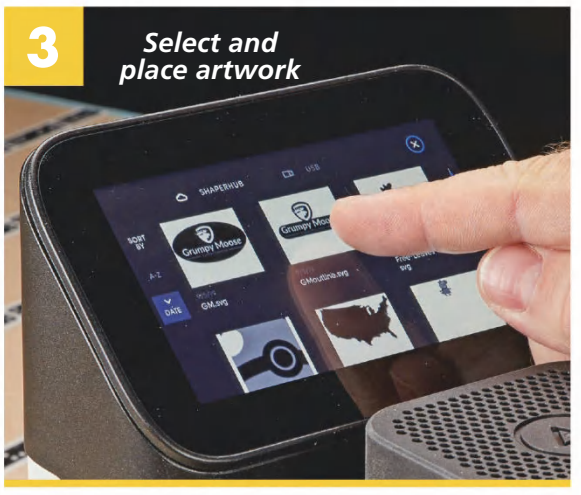

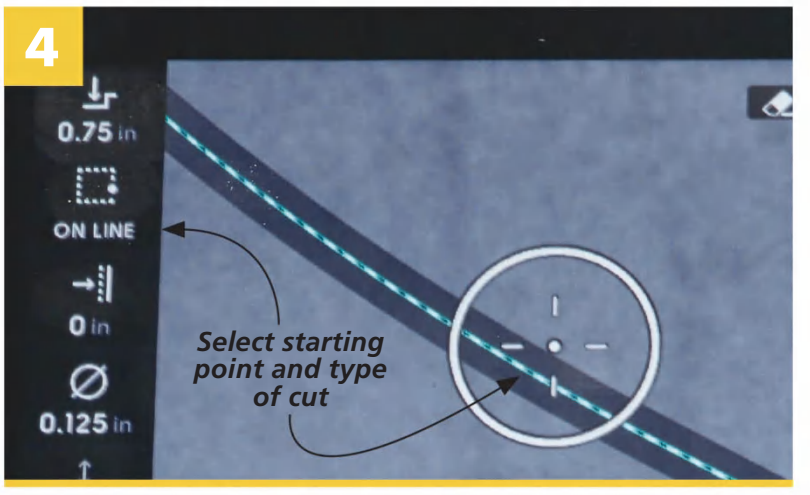

Using *Origin* is a straightforward process. You apply tape, scan the worksurface, select and place the artwork. Finally, you set the parameters of your cut, such as the bit size, depth of cut, and what type of cut you want to make. Then turn the motor on and start routing.

button to go to "auto mode" and the bit will automatically move as far as it can, while remaining inside the target area. This is ideal for tight, intricate areas of a cut. Once you finish a cut, the red button retracts the head.

GRID. One other function worth mentioning is the ability for *Origin* to create a "grid" on a worksurface. After scanning a workspace, the grid function allows you to drop the router bit below the base and "feel" the edge of the worksurface in three locations. This creates an imaginary X-Y grid that you can use to help place artwork. This is helpful when performing joinery tasks such as routing mortises on the edges of a workpiece.

THOUGHTS. My initial impressions of the *Shaper Origin* are pretty positive. Sure — it's an odd feeling, routing while the head is adjusting. It's a bit like holding a gyroscope as it's spinning and moving it around. But, it's not hard. It's actually pretty easy to use and rout — merely different. You're working in conjunction with a robot after all.

The *Shaper Origin* started off as a crowd-funded campaign. It targeted hobbyist users that might not have room for a *CNC*. At $2500, it's definitely an investment. But it's comparable in cost to a conventional CNC machine. And you're not limited on workpiece size, just by how much tape you have on hand.

Someone that does a lot of sign making (photo at left) or inlay work (especially flooring inlays) could benefit from this. It's a blast to use, and the design software for creating files is simple to learn. If you're looking for a CNC for your shop, *Origin* is a compact option that's versatile. W

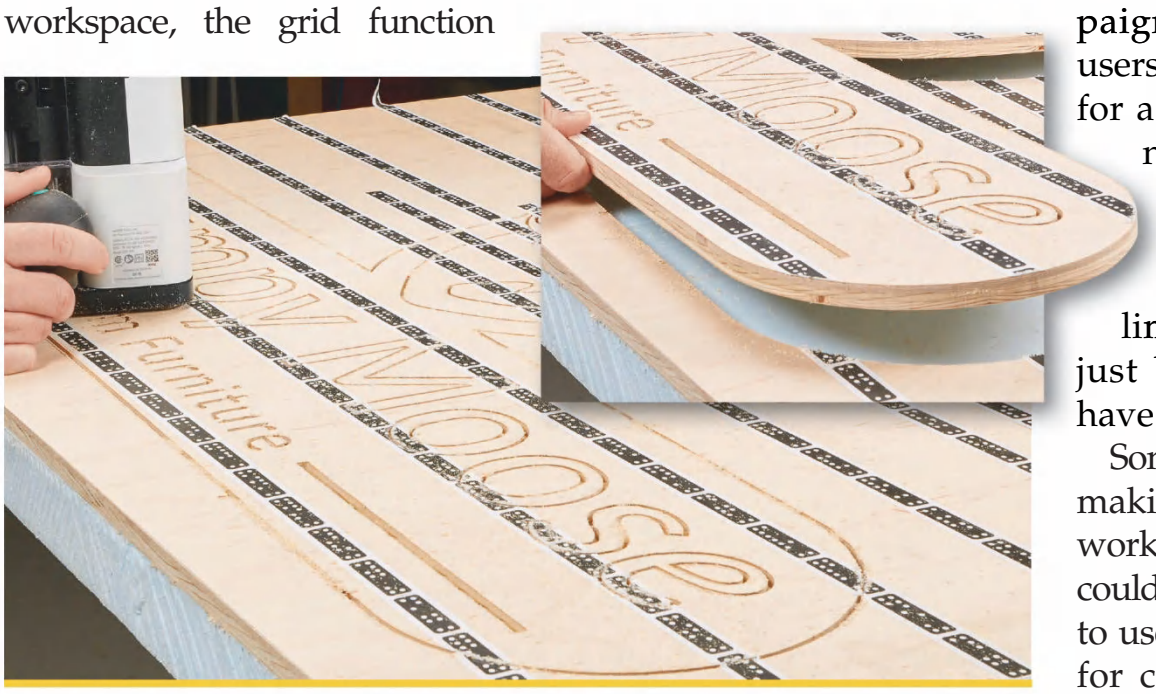

The ability of being able to load a file into *Origin* and change the line types on the machine allows you to create multiple types of cuts (such as through outside cuts) without having to jump back and forth to a computer.

Router Table Fence Options

Of all the major woodworking machines, the router table makes the most sense to build for yourself. Not only is it likely to be far less expensive than a commercial version, you can incorporate any number of features.

While the add-on features draw a lot of attention and can make a router table much more pleasant to use, at its core a router table has two fundamental components — the table top and fence.

I'd like to focus the spotlight on the fence over the next few pages. Here, you'll consider how the fence is attached to the table, how easy it is to adjust, and finally the configuration of the fence face. Whether you're building a router table from the ground up or looking to improve the performance of your existing router table, you'll likely find a path that works best for your shop.

Written by: Phil Huber

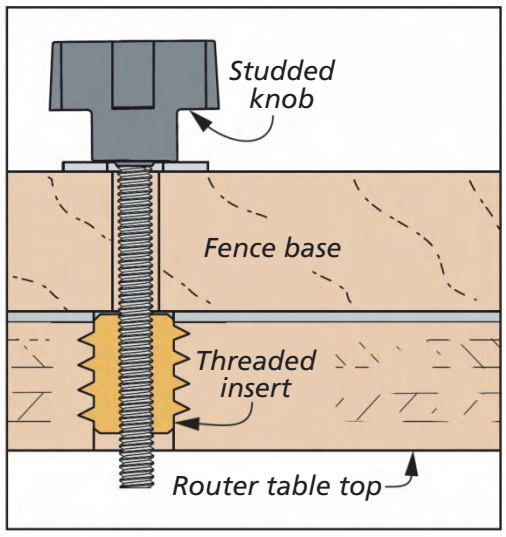

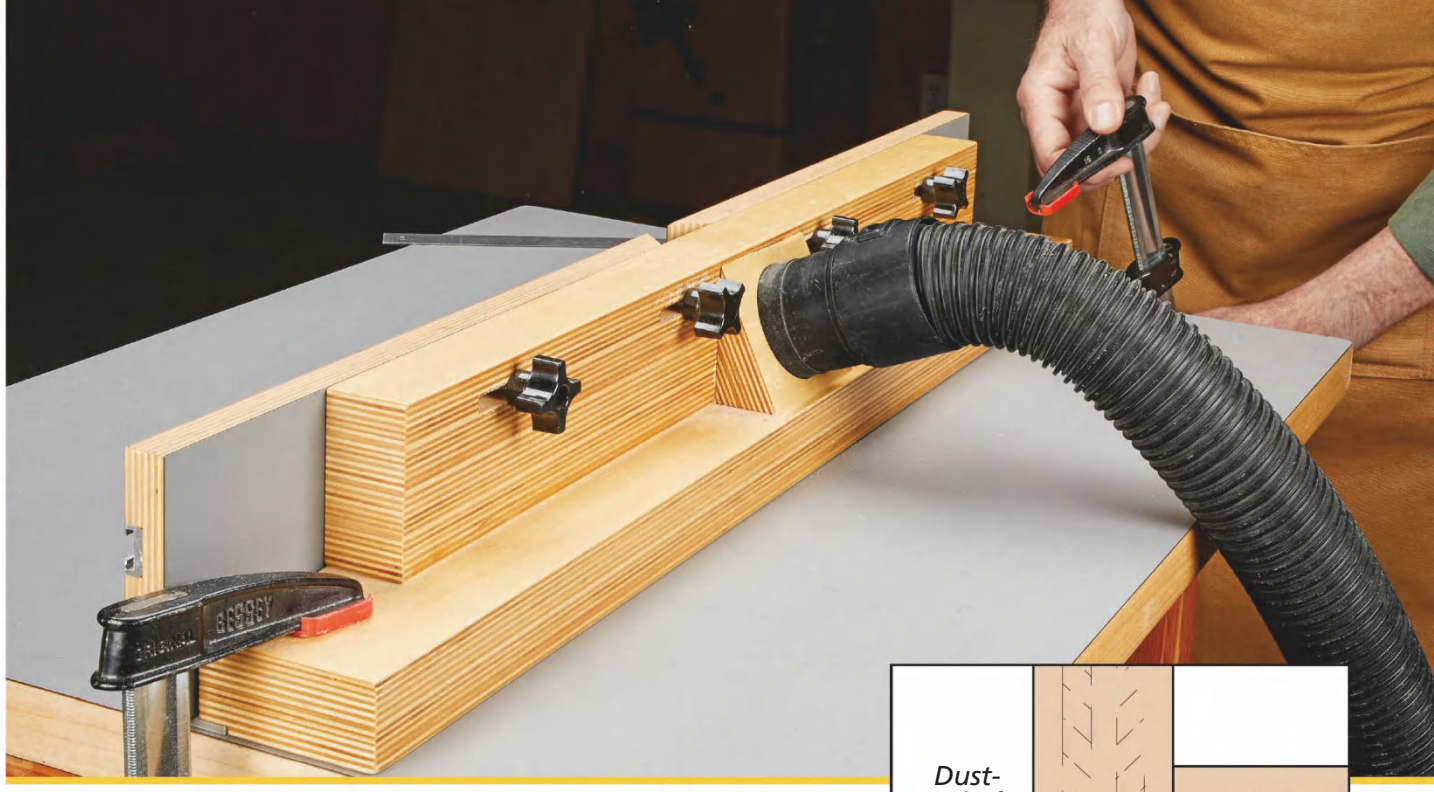

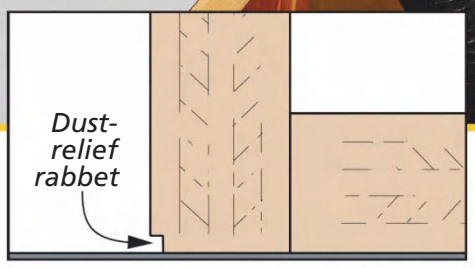

Two small bar clamps work well to attach a fence to a router table. No matter what kind of fence you have, a small rabbet at the base of the fence face keeps dust from spoiling the cut.

CLAMP-ON FENCE. The simplest style of fence is one that gets clamped to the top, as shown in the right photo. The fence itself can even be a piece of wood with a straight edge. Beyond ease of execution, this approach leaves the top smooth and clean (except for a router insert plate).

Simplicity has a cost, however. In order to move the fence, you need to loosen both clamps. This isn't a big deal for large movements. But for smaller changes, a loose clamp may allow the fence to shift more than you want. One other thing to consider is that this arrangement requires a fence long enough to span the full width of the router table.

SLOTTED FENCE & INSERTS. The type of fence most often shown in *Woodsmith* (photo on the previous page and drawing in upper left) attaches with studded knobs threaded into inserts installed in the top.

I find this setup is easier and quicker to adjust than the clamp-on fence. You can also get by with a shorter fence, which is easier to make (and keep) straight.

The slots in the fence base give you a decent range of motion. But for larger movements, you need to remove the knobs and use another set of inserts.

T-TRACK MOUNTED. A step up from the slots and inserts is to attach the fence to a pair of T-tracks embedded in the tabletop (photo and drawing below). This locks securely, as well.

What I like most about it is that the fence seems to slide back and forth easier. This makes adjustments more predictable.

The T-tracks can catch a workpiece as it slides across the tabletop. So you need to take care to set the T-tracks ever so slightly below the surface. Another downside is that the tracks may fill with sawdust, which can interfere with making adjustments.

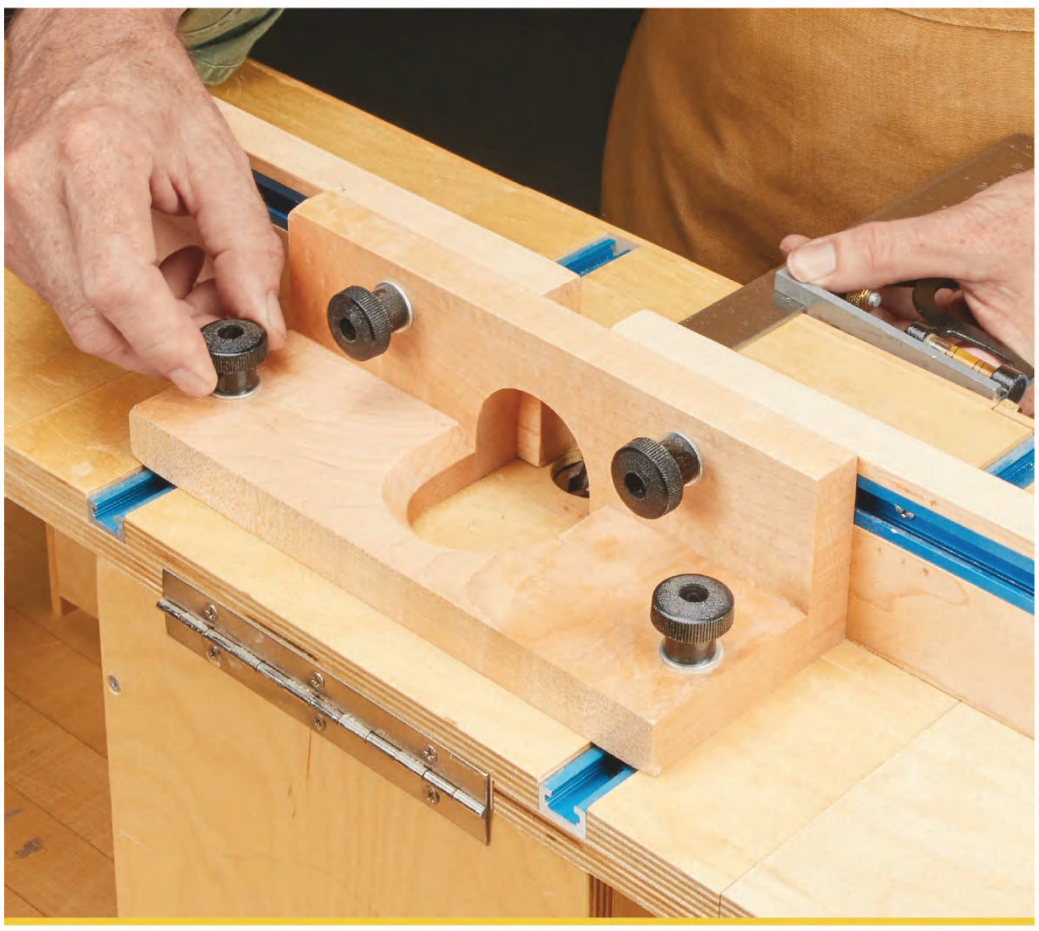

Flange bolts slide in T-track and pass through holes in the fence base. Washers and knobs lock the fence in position (drawing at right). The fence slides back and forth smoothly when making large adjustments.

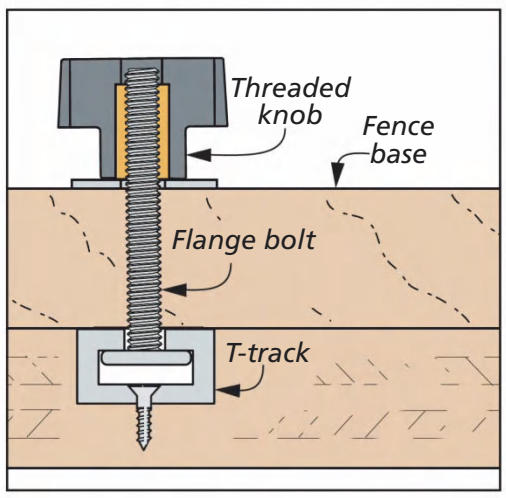

Illustrations: Bob Zimmerman

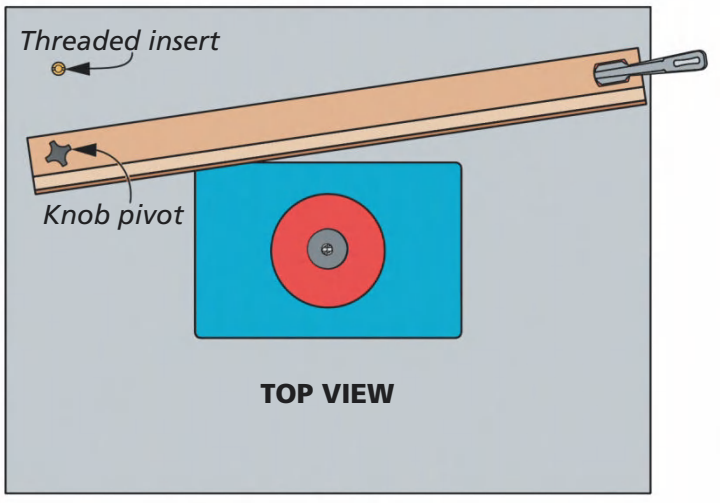

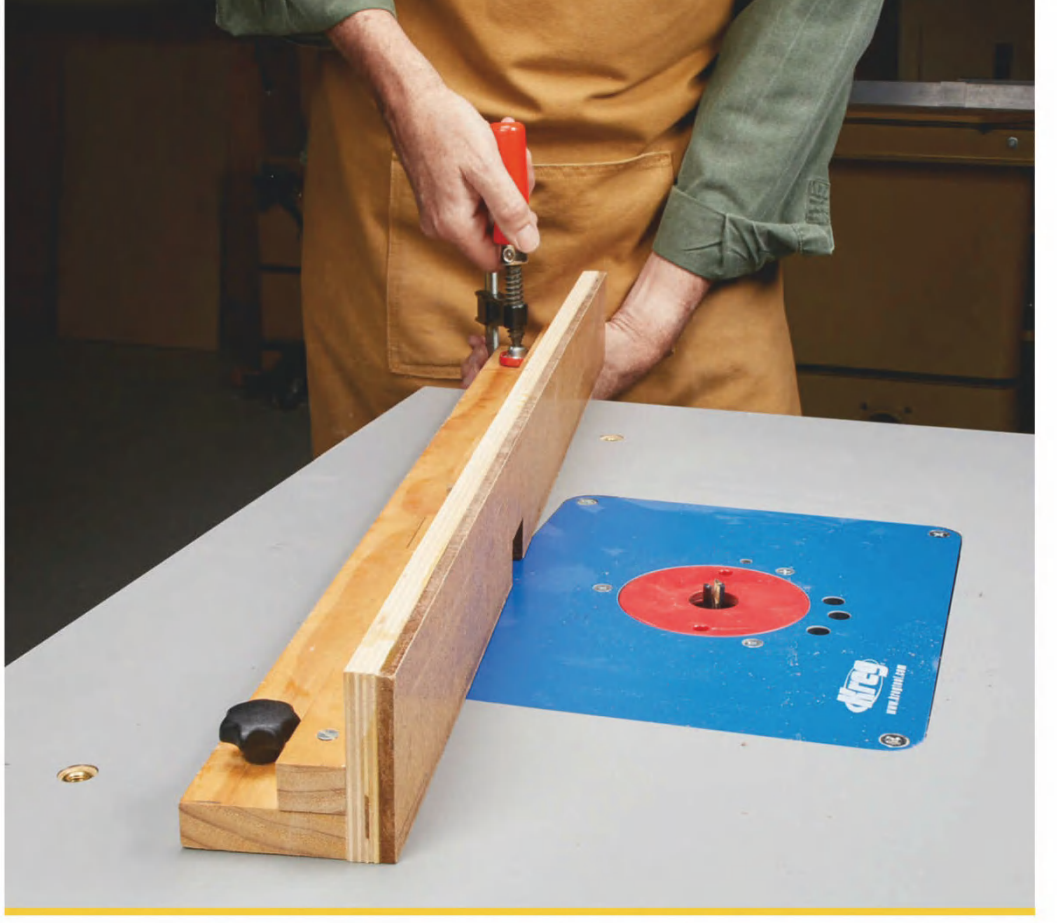

With only one clamp, making small adjustments to a pivoting fence is much faster than some other router table fence arrangements. The pivoting end is anchored by a threaded insert (or two) installed in the table top.

All of the previous router table fences use two locking points to secure the fence in position. It's not necessarily a negative. But when there's a lot of adjustments to be made, all the loosening and tightening can get a little tedious.

The two fences on this page veer off on a different tack. The biggest advantage is that each use a single locking point. And for me, these are better methods for attaching and adjusting a router table fence.

PIVOT FENCE. Rather than adjusting both ends of the fence, you set up one end to pivot on a studded knob and threaded insert. The opposite end swings back and forth, as in the photo and drawing above. Now there's only one lock-down point (I prefer on the infeed side of the table). The payoff is that adjustments are greatly simplified.

There are a few points to bring up. First, it's a good idea to install two or three inserts in the tabletop. This gives you a greater range of positions.

When you install the inserts, be sure the fence opening lines up with the bit when the fence is attached to the insert nearest the bit. Frankly, you rarely need to position the fence more than a few inches away from the bit, so this position will see the most use. Also, the fence needs to be long enough on the adjustment side to allow a clamp to secure the fence to the table.

TABLE SAW RIP FENCE. To save space in my shop, I built the router table into the wing of my table saw. And rather than using one of the previous options, I use the rip fence as the router table fence — sort of.

What I actually do is attach an auxilary router fence to the rip fence. Using the rip fence gives you the ease and security that a table saw rip fence has. It's also typically much smoother to adjust. The auxiliary fence is really only needed when you need to recess the bit, like you would for an edge profile.

There are two options for installing the router table. The first is shown in the left photo. The router table is installed in the right wing of the saw (from the operator's position).

This allows you to keep the router fence attached to the rip fence most of the time. The bit is also less likely to get in the way of making cuts. One drawback is that the fence handle is on the opposite end of the table from where I stand.

Attaching an auxiliary router table fence to a rip fence lets you borrow the ease of use and speed of the table saw fence. This setup can also help you save space in your workshop.

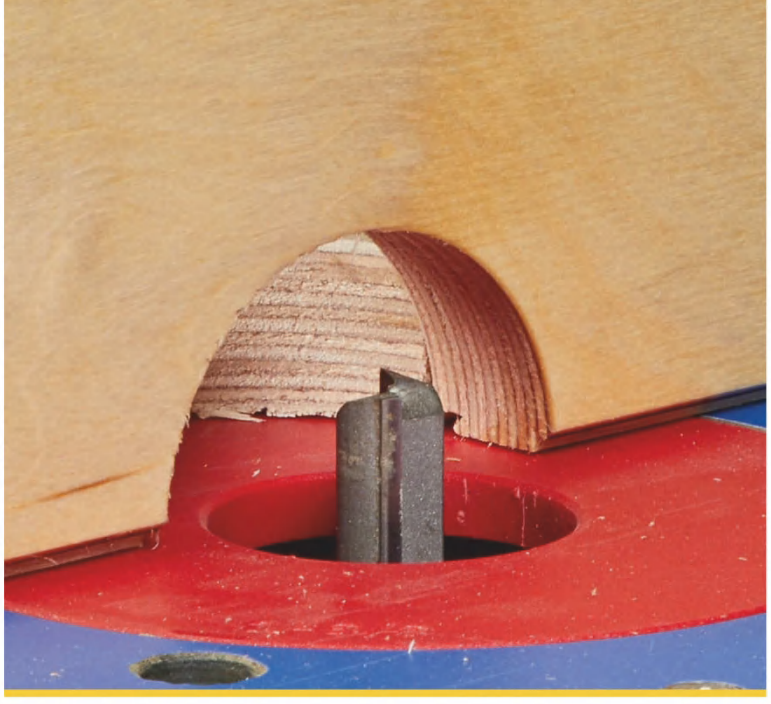

A one-piece fence allows a workpiece to slide along the fence smoothly. The opening is sized to accommodate the router bits you use most often.

A fence with sliding faces allows you to adjust the size of the bit opening. It will be able to handle pretty much every bit and operation you can think of.

The other arrangement is to install the table in the left wing. I do this so I can park the right side of the saw against a wall. And the fence handle is more convenient to use.

The cost is that the router table gets in the way of table saw cuts more often. But with some planning, the disruption is minor.

FENCE FACES

Equally important to the fence mechanics is the face of the fence. It's where the rubber meets the road, so to speak. Of vital importance is making the fence flat, straight, and square to the router table top. Beyond that, things get more subjective. One area to consider is the bit opening.

FIXED OR ADJUSTABLE. The photos above show you the two choices. You can make a fence with a fixed bit opening. Or you can make a fence with sliding, adjustable faces.

A fixed opening is clearly the most straightforward. The advantage is that the fence is made from a single piece. This helps keep the fence straight.

The issue is sizing the opening. It can be tough to find a Goldilocks size that accommodates the bits you use most often.

The idea behind the sliding faces is that they allow you to size the opening to better match the overall size of the bit. In practice, I find that dust may get trapped behind the fences. As a result, they're no longer coplanar and the workpiece catches or shifts during a cut.

The best part of making your own router table is the ability to customize it to suit your preferences. Taking the time to consider your fence options results in a table that not only works well, but is fun to use. W

THE PARALLEL FENCE MYTH

It comes up just about every time I show someone how to use a router table. "Doesn't the fence have to be parallel to the front edge?" This is a carryover from setting up a table saw where the rip fence needs to be parallel to the blade for a safe cut.

Because the fence is set based on the centerpoint of the spinning bit, its position relative to the edge of the table doesn't matter (drawings at right). When you think about it, it's the same principle used when attaching a fence to the table of a drill press.

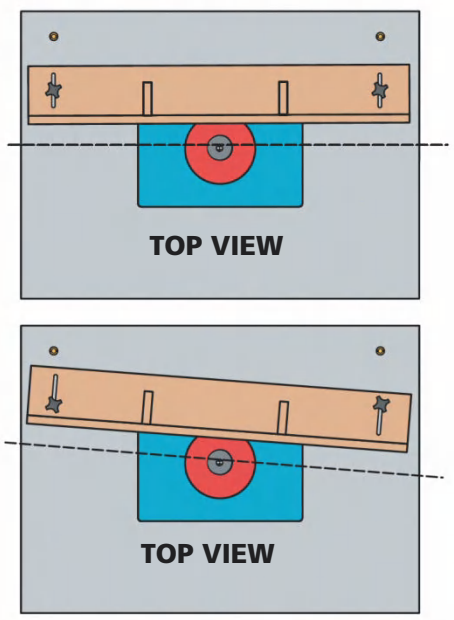

Regardless of the fence angle, the distance between the bit and the fence remains constant

Unlike a table saw rip fence, the fence on a router table doesn't need to be parallel to the edge or miter gauge slot (if there is one).

Gloves in the Shop

When it comes to shop safety, most of us think about protecting our eyes, ears, and lungs. But safeguarding our hands doesn't get nearly the same attention. And it should, because woodworking poses a number of risks to your hands beyond the occasional splinter.

Blades and knives are razor sharp, finishing products can be harmful to the skin, and working with wood for long periods of time has a tendency to zap the natural oils from your skin, leaving your hands dry and cracked. For these reasons, hand protection is just as important as any safety concern. The simplest and most obvious way to do this is by wearing a pair of gloves.

▲ Depending on the task at hand, you'll likely find a number of different types of gloves that are well-suited for use in a woodworking shop.

There are a multitude of gloves on the market for different purposes (photo at left). The glove you choose really depends on the task at hand. Here's a look at some different types of gloves that I find useful in a woodworking shop. (You'll find source information on page 65.)

NITRILE GLOVES. One type of glove that no shop should be without are disposable nitrile gloves, like the ones shown in the photo above. These gloves come in several sizes (sizing chart at left) and can be purchased in boxes of 100 fairly inexpensively at any hardware store.

One nice thing about nitrile gloves is that because they're thin and tight-fitting, you don't have to sacrifice much in the way

What's Your Size?

Measure the circumference of your hand (in inches) along the knuckles and find your size in the chart below

Hand Size	7"-8"	8"-9"	9"-10"	10"-11"
Glove Size	Small (Size 7)	Medium (Size 8)	Large (Size 9)	X-Large (Size 10)

Written by: Vincent Ancona; Illustrations: Bob Zimmerman

Skill Development

To help beginners build confidence while they learn straightforward hand-cut joinery techniques, such as dovetails and finger joints, Veritas® has developed a number of magnetic saw guides that hold a saw at the correct place and the correct angle for a perfect cut.

1-800-683-8170 leevalley.com

1. Veritas® Dovetail Saw 05T02.03
2. Veritas® 14° Dovetail Guide 05T02.05
3. Veritas® 1:8 Dovetail Guide 05T02.12
4. Veritas® 1:6 Dovetail Guide 05T02.11
5. Veritas® Right-Angle Guide with Saw 05T04.05
6. Veritas® Saw Depth Stop 05G45.10
7. Veritas® Crosscut Carcass Saw, 14 tpi 05T07.01
8. Veritas® Magnetic Saw Guide, 8″ 05T20.01
9. Veritas® Rip Carcass Saw, 12 tpi 05T07.05

of dexterity. They're great for tasks where you want to protect your hands, but still maintain a sense of control over your fine motor skills.

I slip on a pair of disposable nitrile gloves any time I'm gluing up or finishing a project. The gloves not only keep your hands clean, they protect your skin from chemical exposure.

I also wear nitrile gloves when sharpening tools, whether with oilstones or waterstones. The gloves keep my hands clean from the sharpening swarf, as well as provide a little better grip on the tool or blade.

WORK GLOVES. One downside of nitrile gloves is that because they're so thin, they don't offer much in the way of protection from cuts, scrapes, or abrasions. For those situations, I typically turn to a heavier pair of work gloves, like you see below.

Leather is the traditional material for work gloves, and for heavy tasks, it's still a good choice. But leather also tends to be stiff and bulky. It also doesn't breathe well. Today, there are all sorts of work gloves made out of combinations of nylon and other synthetic materials that offer great protection, without hindering your dexterity.

▲ Long sessions with a random-orbit sander often lead to a tingling sensation in the hands that can last for hours. A pair of padded gloves will protect your hands from nerve irritation caused by the vibrations of the sander.

PREFERENCES. For working in the shop, I prefer a pair of light to medium-weight gloves that balance protection with comfort in use. The gloves I wear feature a textured, rubberized material on the fingers and palms, so I'm less likely to lose my grip on a workpiece or tool.

I keep a pair of work gloves handy for loading or unloading lumber, or when I'm handling a lot of boards. For example, if I have a stack of boards that I need to run through my planer, I grab my gloves before getting started. The gloves protect my hands from splinters and prevent my skin from drying out.

Work gloves provide varying degrees of protection against cuts and scrapes depending on their thickness and the type of material they're made from. The *American National Standards Institute* (ANSI) rates the cut resistance of gloves on a scale from 1 to 5. The higher the number, the more protection the glove offers. It's important to note though that this is for slicing cuts. Most gloves won't protect you against punctures.

PADDED GLOVES. Protecting your hands from cuts or splinters is an obvious precaution. But there's another risk to your hands that may not be as readily apparent and that is nerve damage due to repeated shock or vibration. The main culprits

▲ When working with rough stock, a pair of ordinary work gloves will protect your hands from cuts, scrapes, and splinters. The textured, rubberized surface of the gloves also provides a better grip on materials and tools.

here are vibrating or oscillating tools such as sanders, air nailers, and oscillating multi-tools.

If you've ever noticed a tingling sensation in your hand after using a random-orbit sander for an extended period, you know what I'm talking about. In these situations, a pair of padded gloves, like the ones shown in the photo at the top of the previous page, are ideal.

These gloves have a shock-absorbent padding material in the palm to cushion the nerves in your hand against vibration. And being fingerless, you still have plenty of dexterity.

GLOVES FOR CARVING. Carving is one area of woodworking with a high risk of accidental cuts to the hand. So it only stands to reason that there are a number of gloves marketed to woodcarvers. Many of these gloves are reinforced with *Kevlar* threads to protect against cuts.

But perhaps the ultimate in protection against knife cuts is a stainless steel mesh glove, like the one shown in the upper photo at right. This is the same type of glove worn by butchers and meat cutters.

◄ A stainless steel mesh glove offers a high degree of protection against accidental cuts when carving. The glove is reversible, so it can be worn on either hand.

For chip carving, or carving spoons or small figures, you may prefer finger and thumb guards, as shown at right. These leather guards simply slip over your thumb and first two fingers, protecting them against accidental slips while still allowing your hands a full range of motion.

SAFETY NOTE. While gloves are useful protective gear, it's important to note that you shouldn't wear them when your hands are in close proximity to a spinning bit or blade. The danger here is that the glove can get caught on the rotating tool and quickly pull your hand into the blade or bit.

And finally, just like safety glasses, ear plugs, or dust masks, gloves won't offer any protection if you neglect to put them on. But fortunately, you'll find that the more you wear them, the more it will become second nature. W

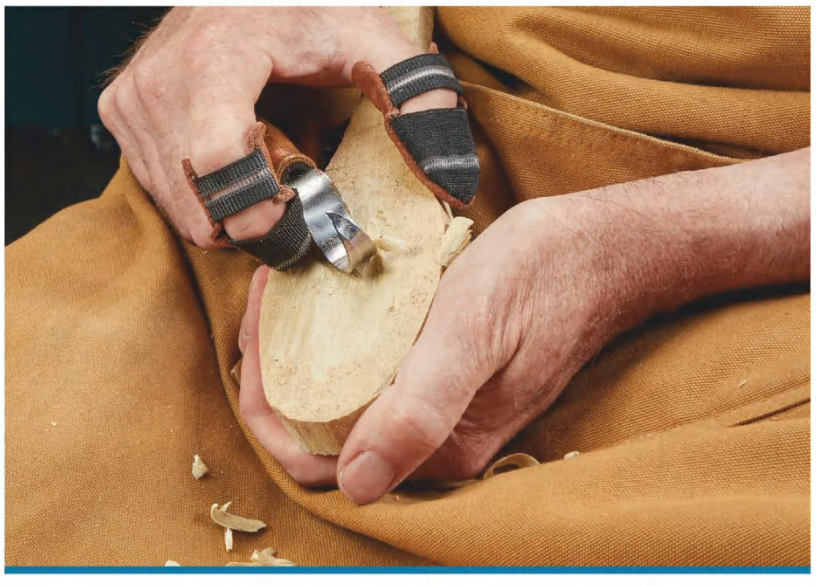

▲ Leather finger and thumb guards offer cut protection when using a hook knife or chip carving knife. The guards are held on with elastic bands.

LIQUID HAND PROTECTION

One of the downsides of wearing disposable nitrile gloves is that you lose some sense of touch and feel. In addition, some people have an allergic skin reaction to gloves. In these cases, you may want to consider a lotion barrier over a conventional glove. These products are applied to your hands before you begin work. They provide a barrier that protects your skin from dirt, grease, and harsh solutions. Once you're done working, simply rinse your hands off. The lotion eventually wears off from the top layer of skin on its own.

▲ Lotion barriers, such as the ones shown here, are a good alternative for people with latex/nitrile allergies.

Coaster Set

This eye-catching set of coasters is sure to attract attention every time you set them out.

▲ A series of intersecting grooves routed on both faces of the coaster results in a lattice-like pattern.

As woodworking projects go, a set of coasters may sound like something you'd expect to find in a first-year high school shop class. But this set of coasters is proof that even the most basic projects can be turned into something interesting.

There's a lot more to these coasters than simply cutting out some round discs from a thin board. The center of each coaster has a series of curved grooves routed on each face. The grooves are offset just enough to create a lattice pattern. (They remind me of waffle fries.)

And no set of coasters would be complete without a custom caddy to hold them when not in use. Although the caddy we've come up with is simple and understated in design, creating the curved side walls requires a bit of careful sawing at the band saw.

All in all, this small project doesn't require a lot in the way of time or materials to build, making it an ideal gift project. But as a woodworker, I think you'll find it offers enough building challenges to pique your interest.

Written by: Vincent Ancona; Project Design: Chris Fitch

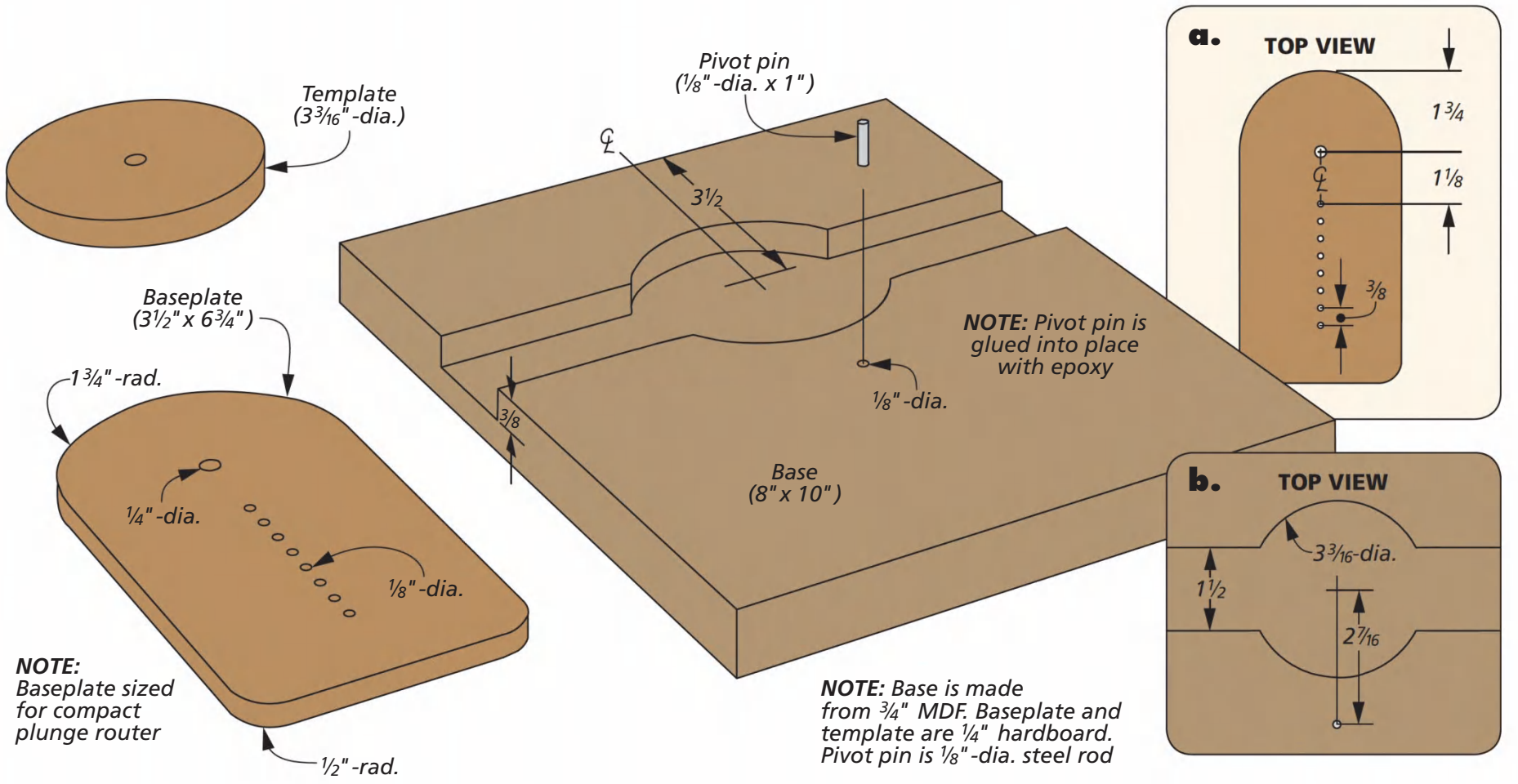

START WITH THE JIG

It may sound strange, but instead of making parts, I began this project by creating a template and a jig that will be used to rout the curved grooves in the coaster inserts. Because you'll be making a total of six coasters (and possibly more if you're making some sets for friends), using a template and a jig is the best way to ensure consistency.

TEMPLATE. The template is nothing more than a round piece of 1/4" hardboard. It's sized to match the diameter of the coaster inserts that you'll be making later (3 3/16"). You can cut the template out at the drill press using a wing cutter.

MAKE THE JIG. With the template in hand, you can turn your attention to making the jig. The jig consists of two parts — a base to hold the coaster blanks and an auxiliary baseplate that is mounted to your router. (I'll explain how the jig works later.)

The base of the jig is a piece of MDF. Using the dimensions shown in the drawings above, lay out the centerpoints for the large recess as well as a smaller hole for a pivot pin. Now using a wing cutter, cut a circle in the base to match the size of the template you just made. You'll need to remove the waste from the inside of the circle with a router.

After the recess is completed, cut a dado through the center at the table saw. This allows you to easily remove the coaster blanks from the jig once you've routed the curved grooves.

The final step is to drill the hole for a pivot pin. This pin is made from 1/8" steel rod and is installed so it stands proud by 1/4".

BASEPLATE. The baseplate is made out of 1/4" hardboard. It has a 1/4"-dia. hole for a router bit and a row of smaller holes that are sized to fit over the pivot pin the in the base of the jig.

You may need to alter the overall size of the baseplate to fit your router. Just make sure to keep the spacing and relationship of the holes the same. Now you can set the jig aside and begin making the coaster blanks.

SETTING UP THE JIG

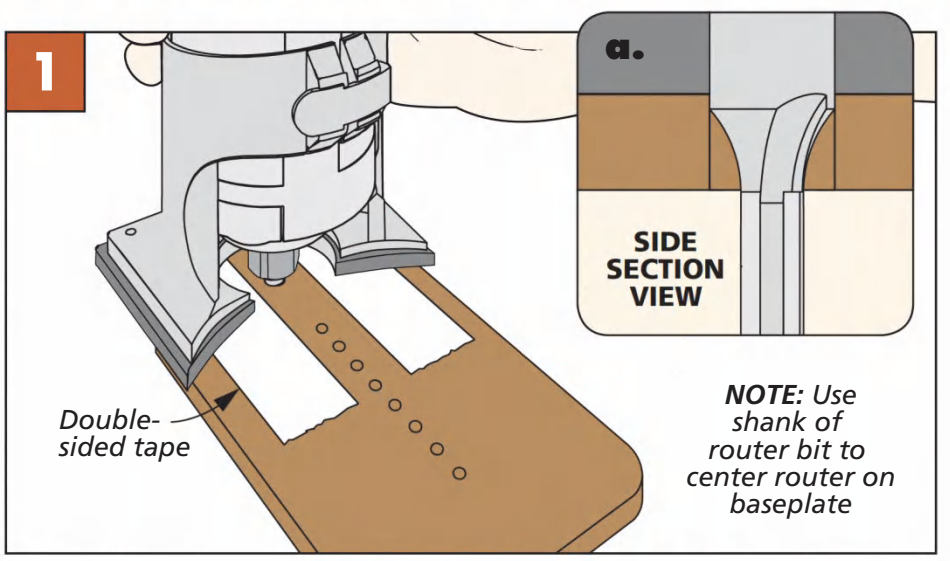

Position the Router. To position the router on the baseplate, install a 1/4" shank bit in the collet and use it to center the router in the hole of the baseplate. Double-sided tape secures the router.

Illustrations: Becky Kralicek

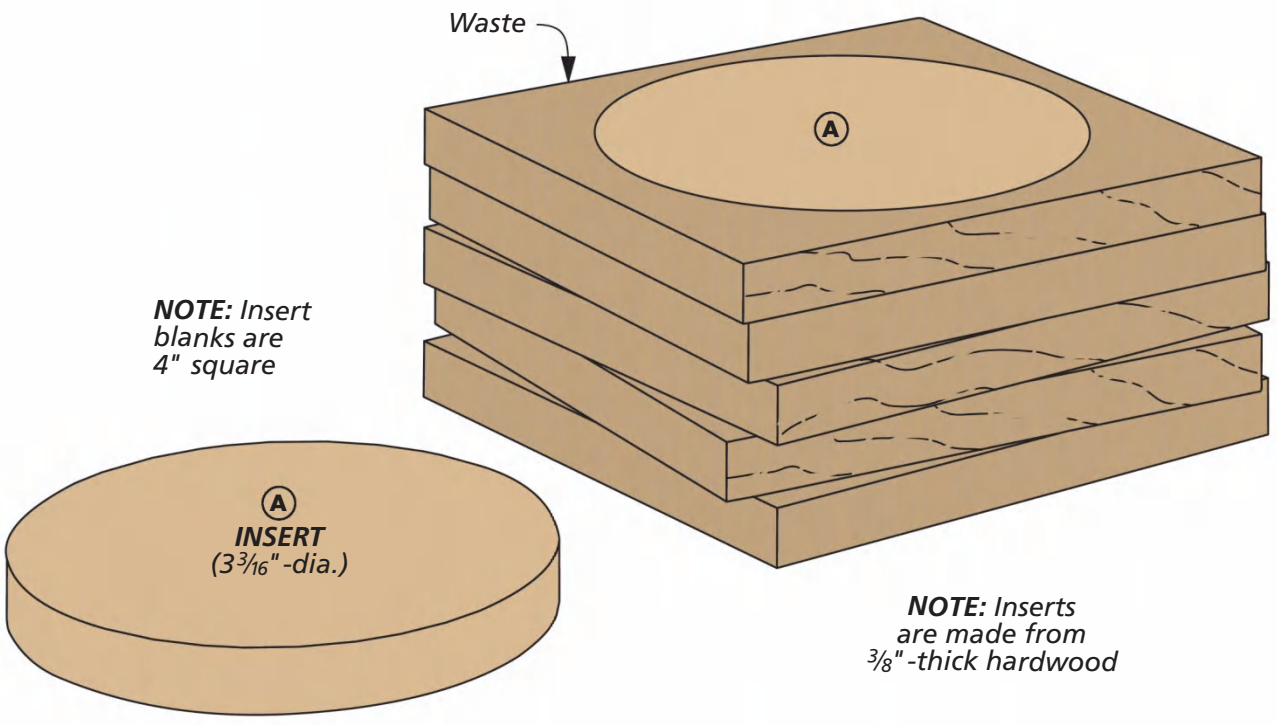

That's so GROOVY

Each coaster is actually made up of two parts — an insert (shown above) and a ring (shown on the next page). I chose padauk for the inserts and wenge for the rings (as well as the caddy).

The inserts are cut from 3/8"-thick stock. You can use the template you made on the previous page to trace out the inserts on your blanks. You'll need a total of six inserts. But it's a good idea to make a couple extras to use as test pieces or in case of one gets damaged in the process of routing the grooves.

CUT & TRIM. Once you have the inserts laid out, cut them to rough shape at the band saw, staying just outside of the layout line. To trim the blanks to final size, I used the template and a flush-trim bit. Simply attach the template to the insert with double-sided tape and trim it flush at the router table.

SETTING UP TO ROUT. Now that you've got your jig and insert blanks in hand, you're just about ready to rout the grooves. The basic concept here is pretty simple. The baseplate acts as a pivoting trammel, guiding your plunge router in an arc. The index holes in the baseplate allow you to create evenly spaced grooves.

To use the jig, mount your router to the baseplate. Then set depth of the router bit for exactly half the thickness of the insert blank (3/16"). This will create the lattice-like openings where the grooves intersect.

Set the first insert into the recess in the base of the jig, using a small piece of double-sided tape to hold it in place. Then set the router on the jig so the first hole in the baseplate fits over the pivot pin and rout the first groove (Figure 1 below).

After routing the first groove, reposition the router and baseplate so the next hole fits over the pivot pin and rout the second groove. Repeat this process until you've routed all the grooves on one face (Figure 2).

ROUTING THE GROOVES

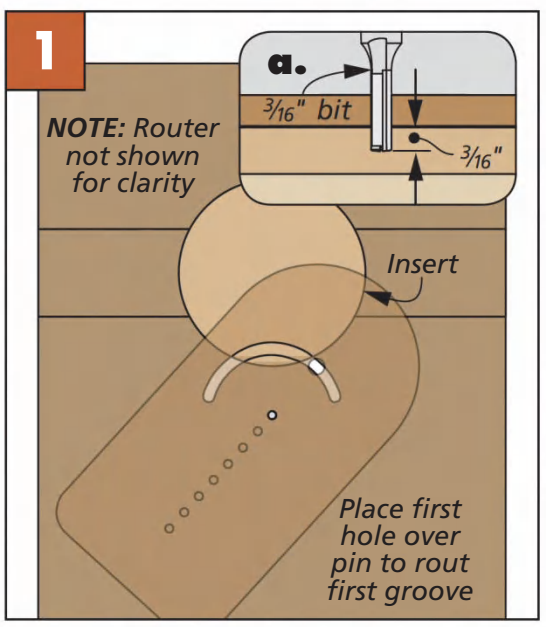

Rout First Groove. Place the first hole of the baseplate over the pin to rout the first groove in the insert.

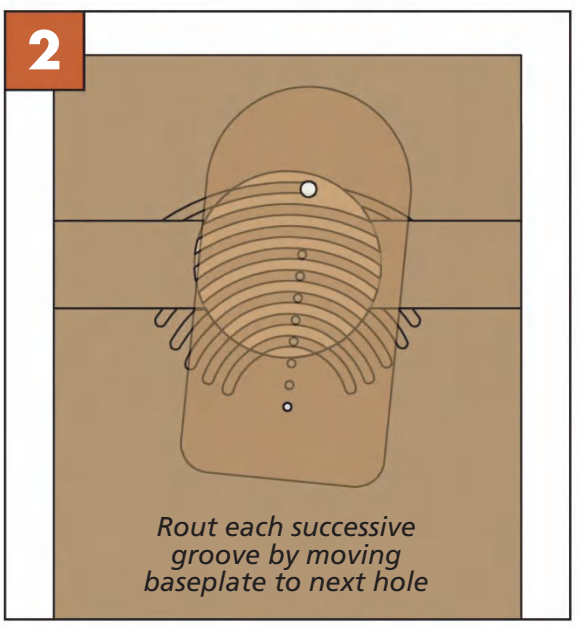

Step & Repeat. Move the baseplate over one hole to rout each successive groove in the insert.

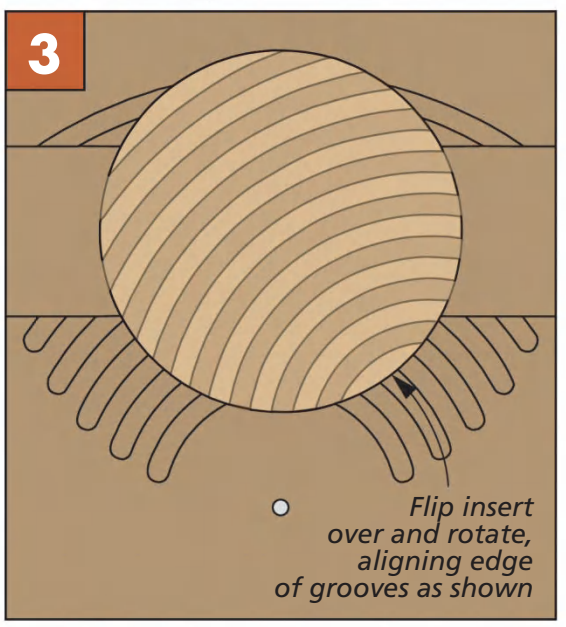

Flip & Rotate. Flip the insert over and rotate it slightly to rout the grooves on the opposite face.

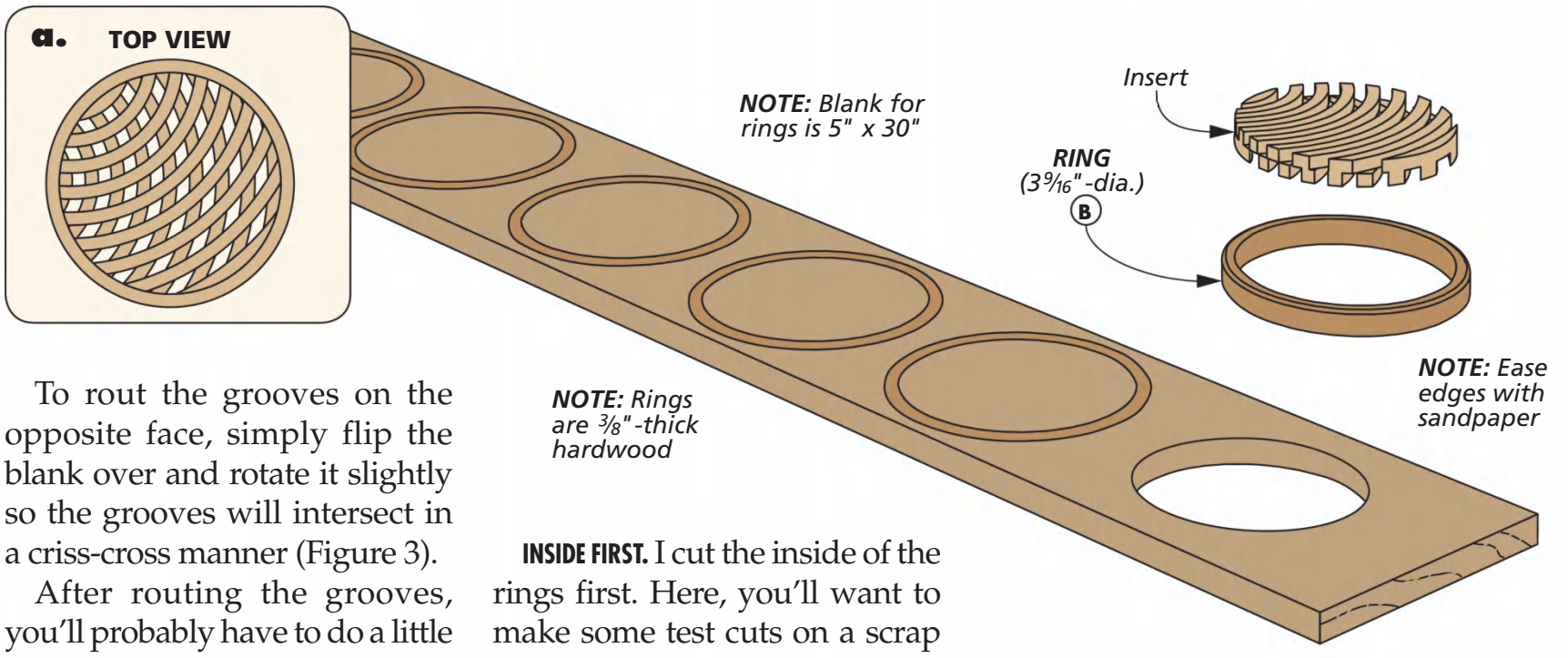

To rout the grooves on the opposite face, simply flip the blank over and rotate it slightly so the grooves will intersect in a criss-cross manner (Figure 3).

After routing the grooves, you'll probably have to do a little sanding to clean up any fuzzies left behind from the router bit. Then you can set the inserts aside while you make the rings.

PUT A RING ON IT

Compared to the inserts, the rings for the coasters are pretty simple. The rings are also made from 3/8"-thick stock. I started by planing a long blank to the thickness, as you see above.

The rings are cut using a wing cutter, as shown in the box below. Before getting started, I attached my blank to a backer board using some double-sided tape.

INSIDE FIRST. I cut the inside of the rings first. Here, you'll want to make some test cuts on a scrap board first to ensure the opening is an exact fit for the inserts.

Once you're satisfied with the fit of the insert in your test piece, you can cut the openings on your actual workpiece. Cut through the blank, but don't remove the waste from the backerboard just yet. You'll need the center hole in the waste for cutting the outside of the ring. The tape will hold the waste to the backerboard.

OUTSIDE NEXT. To cut the outside of the rings, you'll need to reverse the cutter bit in the wing cutter and readjust the spacing on the bar. The outside diameter of the ring isn't quite as critical as the inside diameter. The goal here is to end up with a ring width of 3/8".

ASSEMBLY. Once you have all the rings cut, you can remove them from the backerboard. Now carefully glue the inserts into the rings. You'll want to apply the glue sparingly here to avoid having to clean glue squeezeout from in between the grooves. After sanding the surfaces flush and smooth, round over the outside edges of each coaster slightly.

WING CUTTING

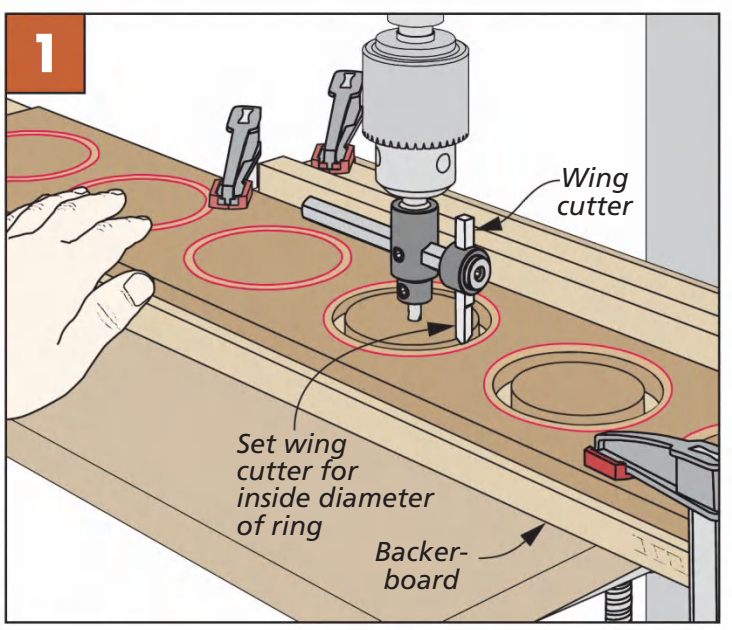

Inside Diameter. With the blank taped to a backer board, adjust the wing cutter to cut the inside diameter of the ring.

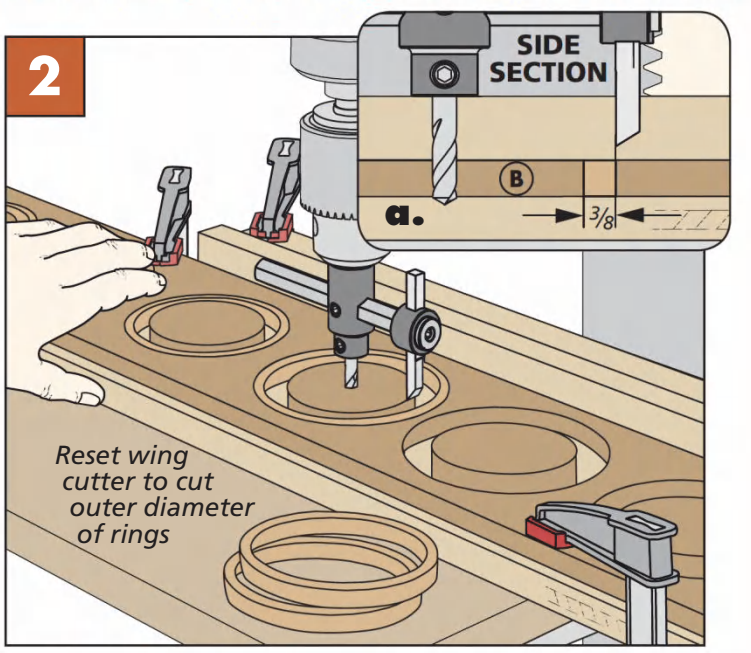

Outside Diameter. Reverse the cutter and readjust it to cut the outside diameter. Then carefully remove the rings from the backer.

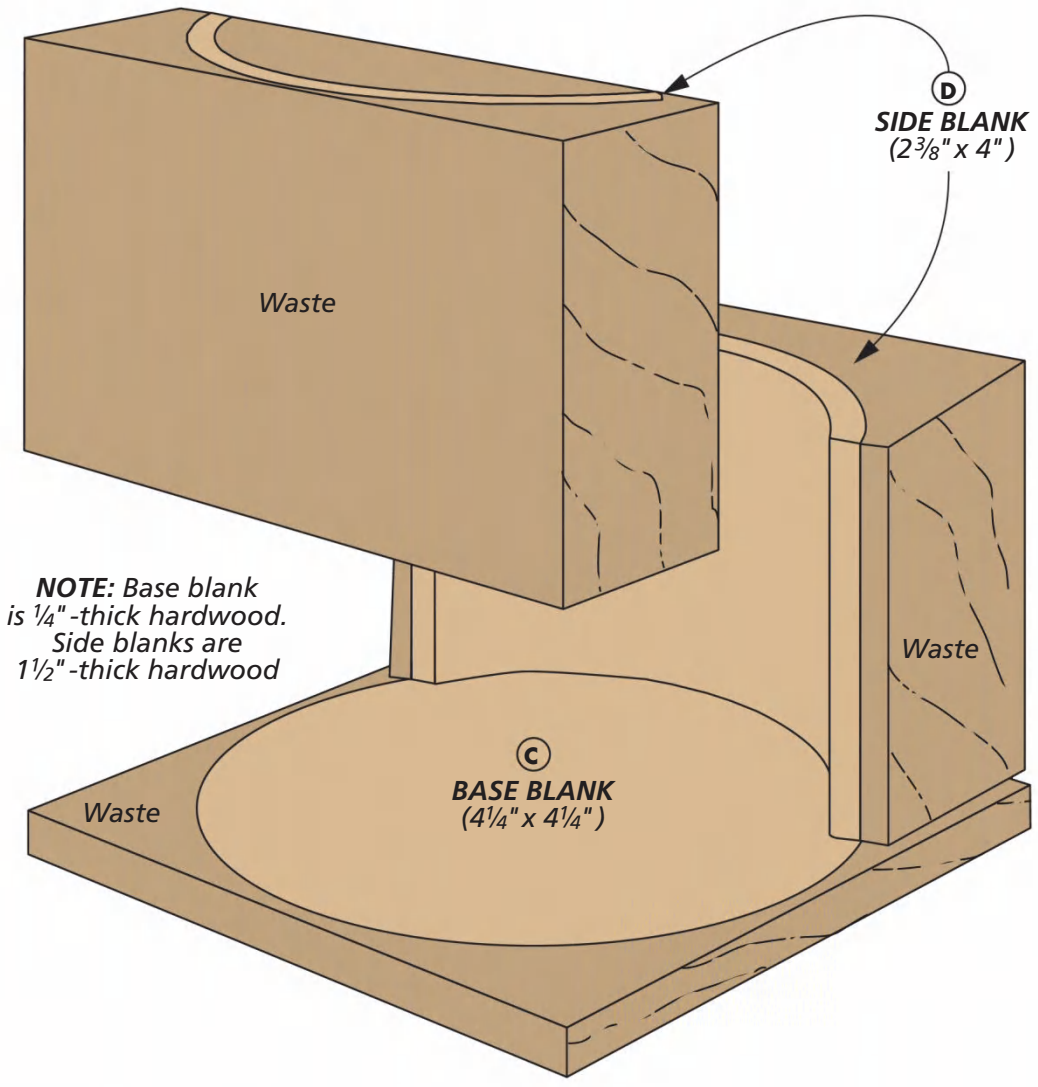

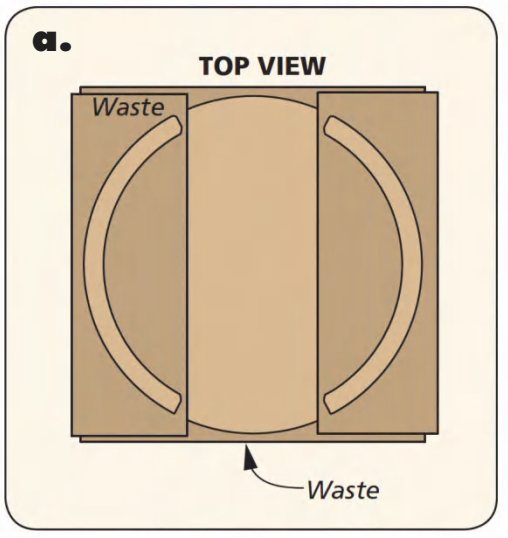

Building the CADDY

Keeping the coasters corralled when they're not in use is the job of the caddy. The caddy is made up of three parts — a base and two curved sides. The real challenge in making the caddy is creating the sides so their curve matches the coasters.

Before focusing on that, however, I made the base. It starts off as nothing more than a ¼"-thick square blank, as shown in the drawing at left. I made the blank oversized to start with. It will get cut to final size later when you shape the sides. For now, you can just set it aside.

SIDES. The side walls of the caddy are only 3/16" thick. But because of their curved shape, you'll need to make them out of 1½"-thick blanks. Start by laying out the profile of the sides on the top of each blank, using the full-size pattern shown below.

INSIDE CURVE. The first step in shaping the sides is to cut the inside curves, as detailed below. I did this at the band saw, using a narrow blade. You'll also want to make the mitered cuts on the ends. Once this is done, you can clean up any blade marks using a sanding drum on the drill press.

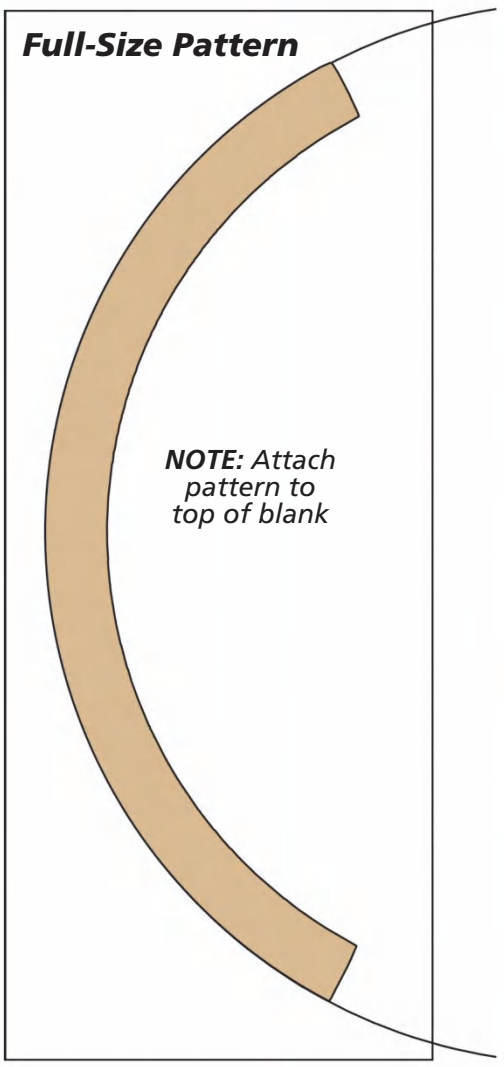

CUT THE INSIDE CURVES

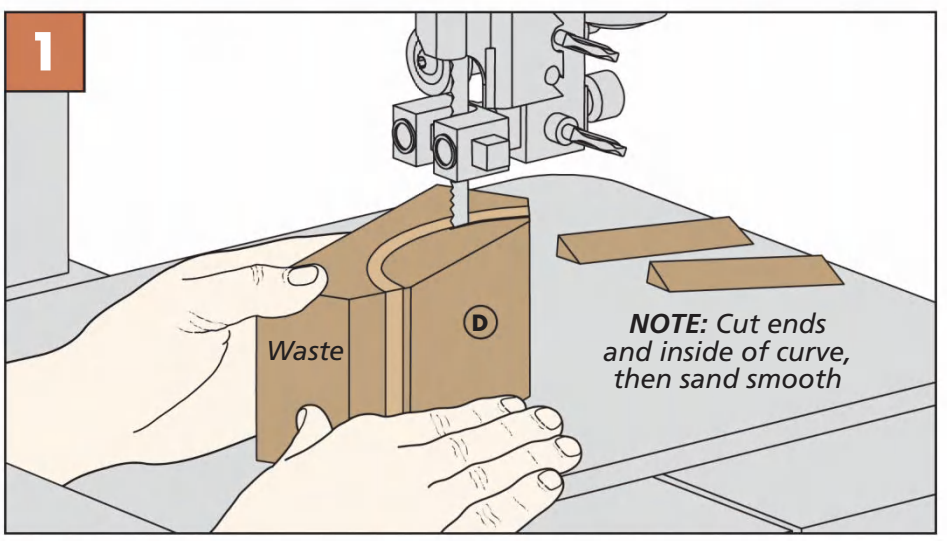

Inside Curve First. Using the pattern shown to the left, lay out the profile of the side pieces on your blanks. Then at the band saw, cut the inside curve of the profile and sand it smooth.

ASSEMBLY. With the inside curves nice and smooth, you're ready to glue the side blanks to the base blank. The key here is to make sure you position the sides accurately on the base.

To do this, I made a plywood spacer that is slightly larger than the coasters (drawing at right). This creates enough clearance so you can easily insert and remove the coasters from the caddy.

Attach the spacer to the center of the base using a small piece of double-sided tape. Using a compass, scribe a circle 3/16" away from the edge of the spacer. This will serve as a guide when it comes time to cut the outside curves.

Now, you can glue up the sides around the spacer as shown at right, making sure to keep them evenly spaced at the ends, as shown in detail 'a' on the previous page. (Be careful not to accidentally glue the sides to the spacer.) Once the glue is dry, you're ready to make the necessary cuts to give the caddy its final shape.

OUTSIDE CURVES. The outside profile of the caddy is also cut at the band saw (Figure 1 below). Again, simply cut just outside your layout lines. Once you've completed the cut, sand the outer faces smooth.

Although you could use a stationary belt sander to do the sanding, I opted for hand sanding. These pieces are fairly thin and all it takes is one slip on a belt sander to ruin all the work you've put in to this point. While you're sanding the curved surfaces, make sure to ease the edges slightly as well.

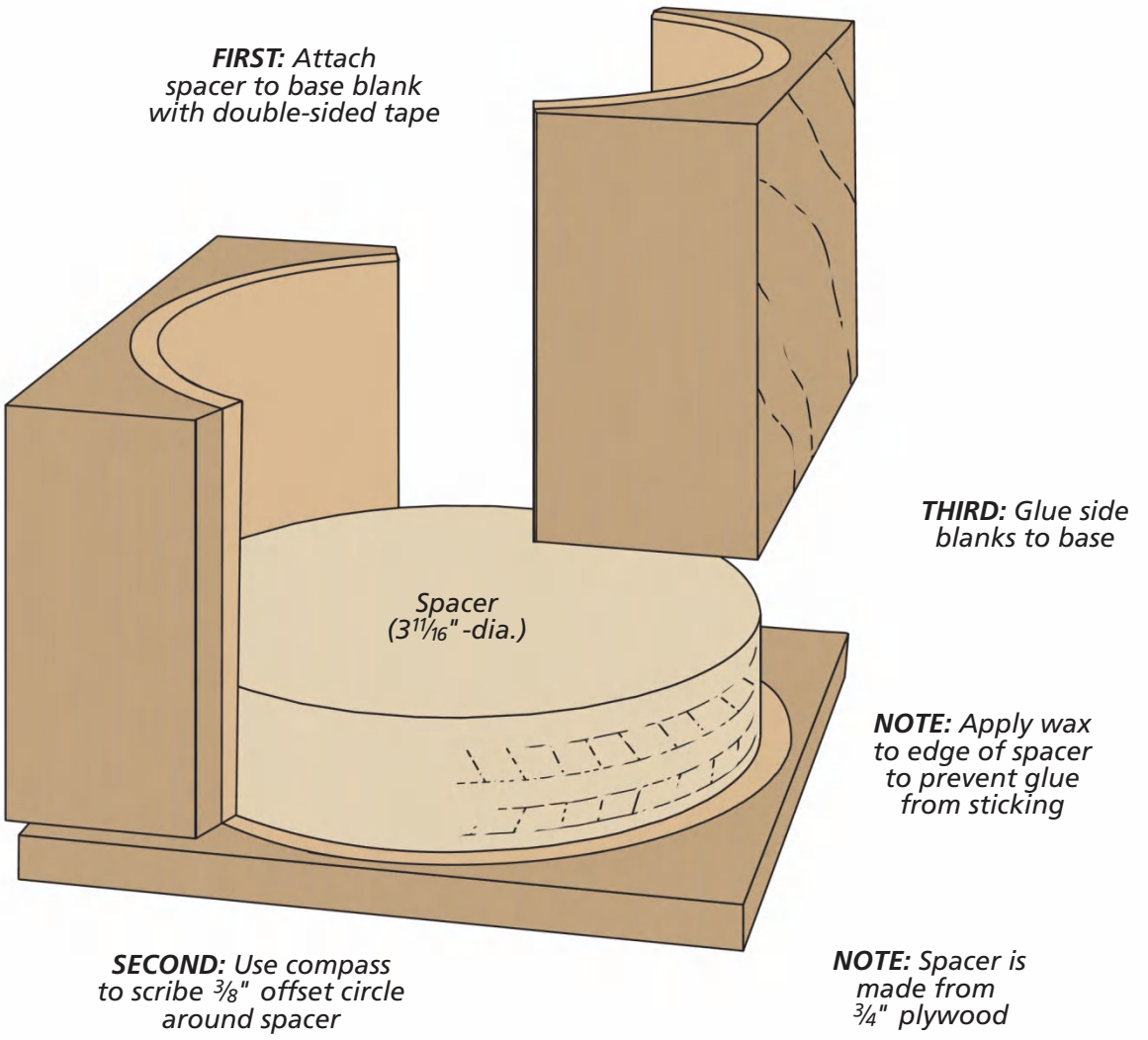

APPLY A FINISH. With the caddy complete, the only thing left to do is apply a finish. I chose to use an oil finish because it's a little easier to apply to all the open latticework of the coasters. Even so, you'll need to spend a little time making sure you get finish into all the grooves on both faces of the coasters.

Depending on where you plan to place your coaster set, you may want to glue a piece of felt or cloth to the bottom of the caddy to prevent it from marring your tabletop. But this is completely optional.

After I completed this set, I discovered another benefit of the project. Building your own set of coasters definitely makes you a lot more likely to actually use one — without having to be reminded to do so. W

FINISH CUTTING THE OUTSIDE

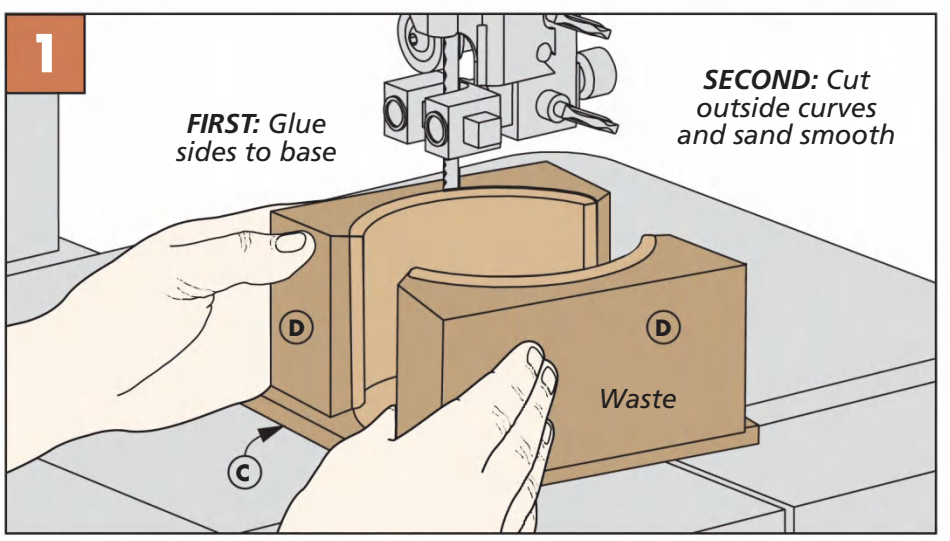

Cut to Final Shape. After gluing the blanks for the sides to the base, complete the caddy by cutting the outside to shape and sanding everything smooth.

Materials

A	Coaster Inserts (6)	3/8 x 3 3/16-dia.
B	Coaster Rings (6)	3/8 x 3 9/16-dia.
C	Caddy Base Blank (1)	1/4 x 4 1/4 - 4 1/4
D	Caddy Side Blanks (2)	1 1/2 x 2 3/8 - 4

You can easily change blades to suit the task at hand. The blade depth is adjusted with light taps from a mallet or hammer.

Router Plane

You can make this high-quality tool that's sure to come in handy on nearly every project you build.

While a router plane doesn't share the same iconic status as a smoothing plane or a hand saw, its usefulness has earned it a place in my toolbox. Just as a hand plane smooths large visible surfaces of a project, a router plane levels surfaces that usually aren't seen but are just as vital to the success of a project. These include the bottoms of rabbets, dadoes, grooves, tenon cheeks, and hinge mortises.

The way a router plane does all this lies in its construction. An L-shaped blade extends below the sole to reach hard-to-get surfaces. The base acts as the reference to create a parallel surface within the joint. As a practical matter, the router plane ensures that grooves are a consistent depth from the surface or that tenon cheeks are free of twist for square assemblies. This simplicity of the design means this versatile tool is pretty straightforward to make rather than buy. It also results in a custom tool unlike any you've seen.

For this plane, I chose a solid-wood body made up of two layers. A pair of rubberized knobs gives you a secure grip. Throw in a handful of assorted hardware and it's plain to see it won't take you long to make. All that's left is the blade. Several plane makers offer blades. So I picked up a few different sizes to tackle a wide range of tasks. While I enjoy making things for others, an indulgence like this is a welcome treat — one that I'll benefit from every time I use it.

Written by: Phil Huber; Project Design: Dillon Baker

Solid-wood **BODY**

The design approach for the body of the router plane consists of a thick upper layer of wood with a thinner lower layer. The reason for the two parts boils down to toughness. The lower baseplate is made from hard ebony to resist wear and blemishes. The upper layer is made from European beech — I like how the grain and color complement the ebony.

GETTING STARTED. The construction kicks off with making rectangular blanks for both the top and baseplate, as shown in the right drawing. Rectangular blanks are going to be much easier and safer to work with.

The baseplate has a pair of overlapping holes to allow for bit access and visibility. Then at the router table, you'll rout a slight chamfer around the bottom edges of the holes, as illustrated in detail 'a.' Grab the glue bottle and clamps to laminate the baseplate to the top.

DRILL & BEVEL. You need to head back to the drill press once the clamps come off. Use the hole in the baseplate as a guide to drill a hole through top. You can see this in Figure 1 in the box below.

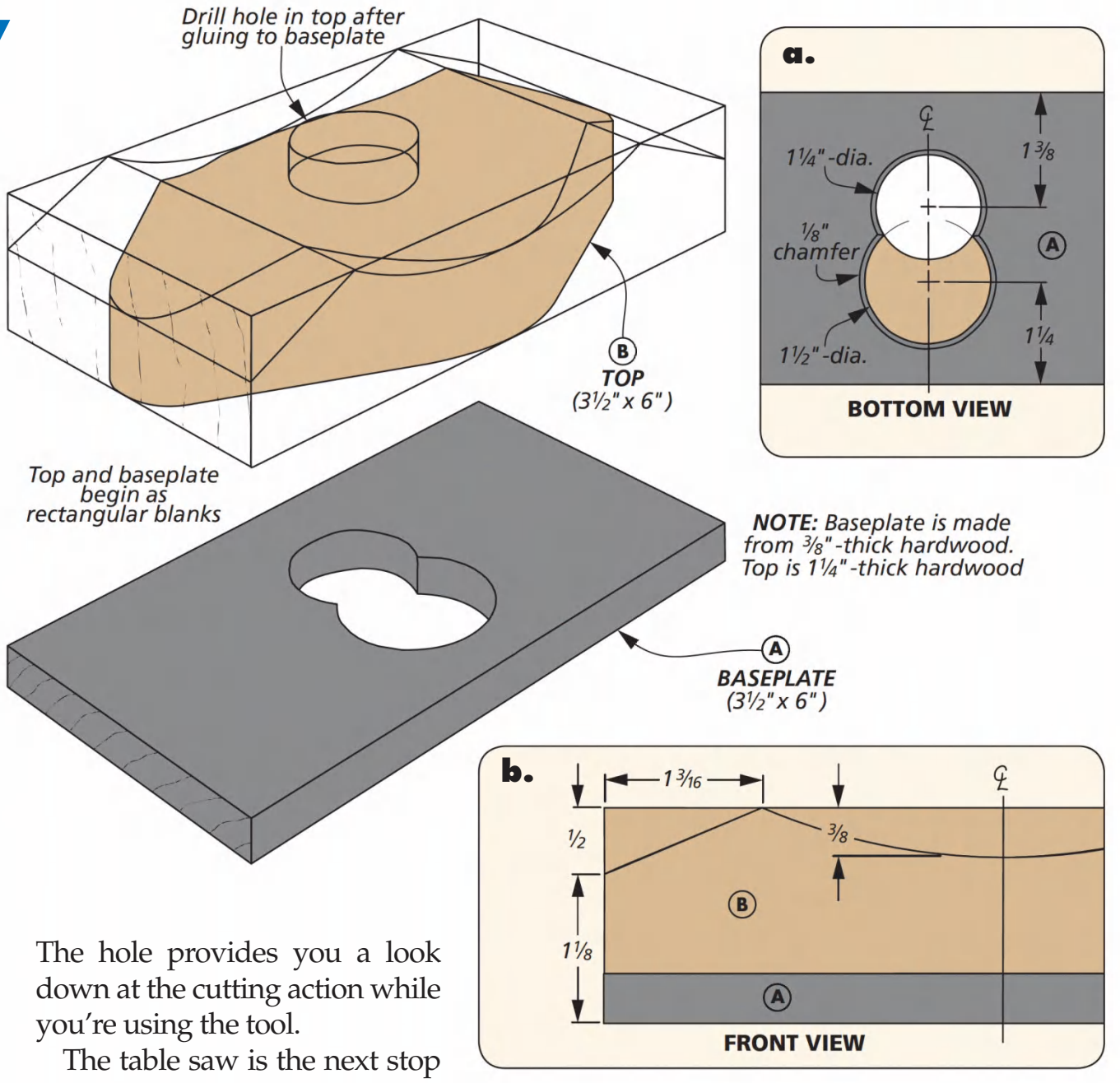

The hole provides you a look down at the cutting action while you're using the tool.

The table saw is the next stop on the journey. Figure 2 shows the setup for beveling each end of the body. These angles splay the handles and make using the router plane more comfortable.

SHAPING THE TOP. In order to add a little style to the body and lighten its appearance, I cut a curve at the band saw, as in Figure 3. The saw blade leaves noticeable blade marks. So, you'll need to smooth out the surface with some filing and sanding.

MACHINING DETAILS

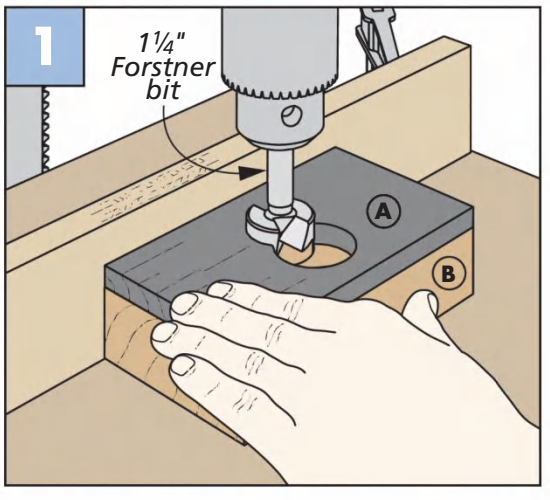

Clearance Holes. Use the holes in the baseplate as a guide to locate the Forstner bit to drill through the body.

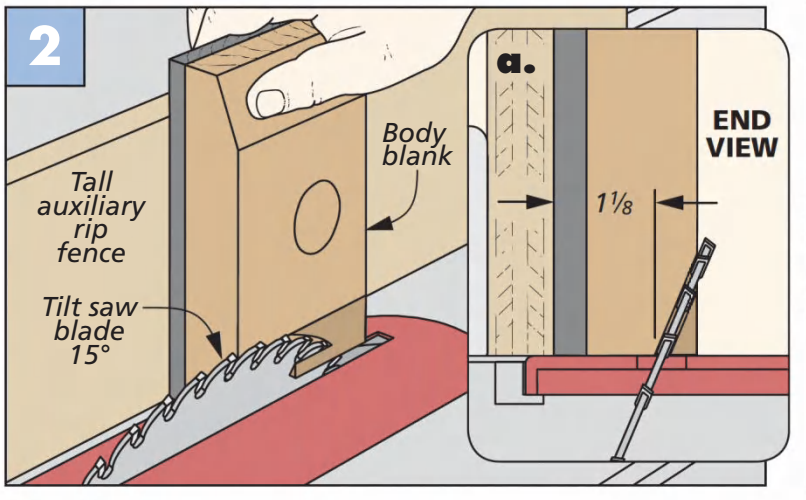

End Bevels. To create the angled ends of the body, tilt the saw blade slightly and guide the workpiece along a tall auxiliary rip fence.

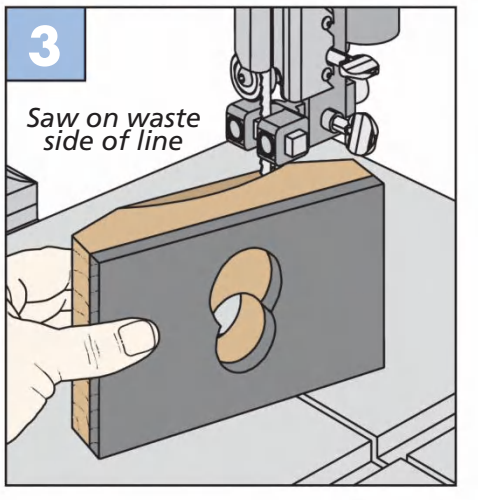

Smooth Curve. Cut a curve in the upper face of the body. Then smooth with handwork.

Illustrations: Dirk Ver Steeg

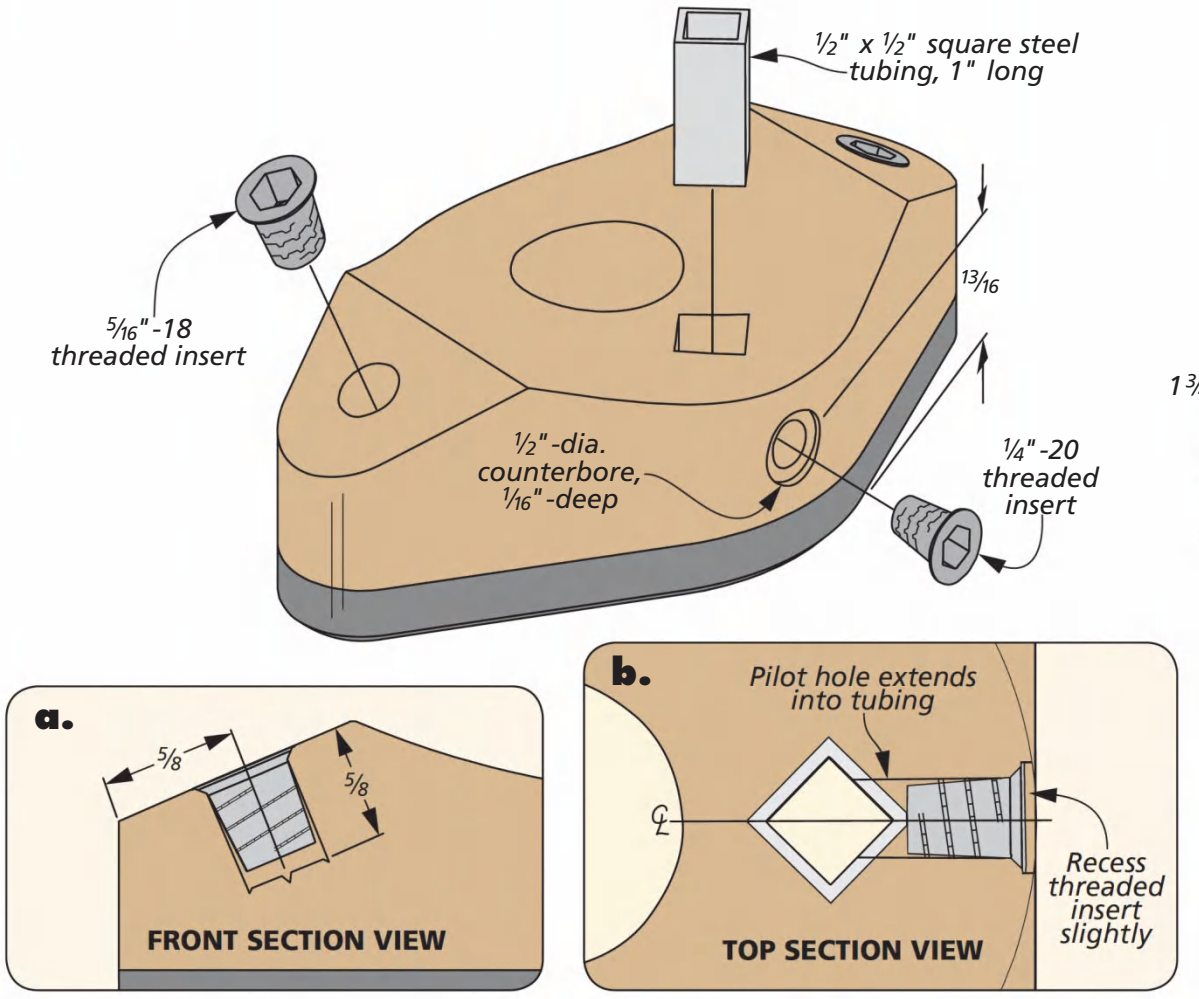

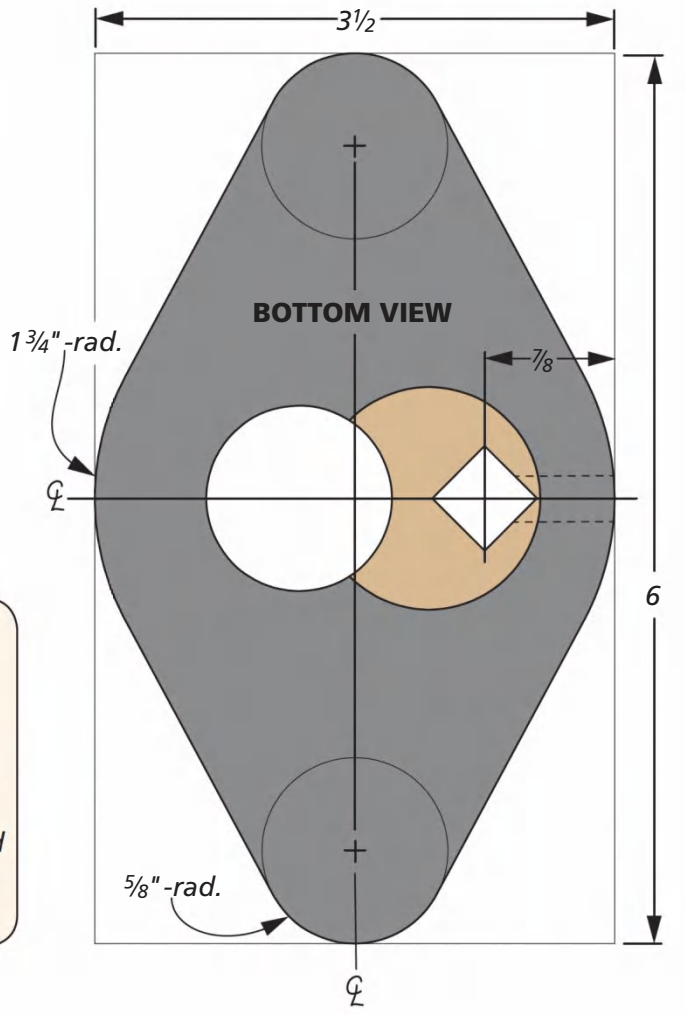

Install some **HARDWARE**

The body blank still requires a few more steps before you can take it to the final shape. You'll install the hardware for mounting the two knobs and accommodating and securing the blade.

THREADED INSERTS. The knobs have threaded holes. To attach them, threaded inserts and short threaded rods are installed in the body. Figure 1 below shows how I drilled the holes for the inserts.

The important detail is making sure the drill bit enters the beveled end squarely. Rather than tilt the table, I find it's easier to cut a scrap piece to the correct taper to angle the workpiece.

You can install the threaded inserts in the holes, but hold off on the knobs. They'll just get in the way for the remaining steps.

BIT HOLE. The router plane blades I used have a square shank that sits 45° to the cutting edge. This arrangement allows the blade to be held in place securely with a single knurled knob wedging it in place. What I wanted to avoid is the bit enlarging a simple hole in the wood body.

The solution is shown above. The blade slips inside a piece of square tubing. To fit the tubing, start by drilling a hole through the body and laying out the

DRILLING DETAILS

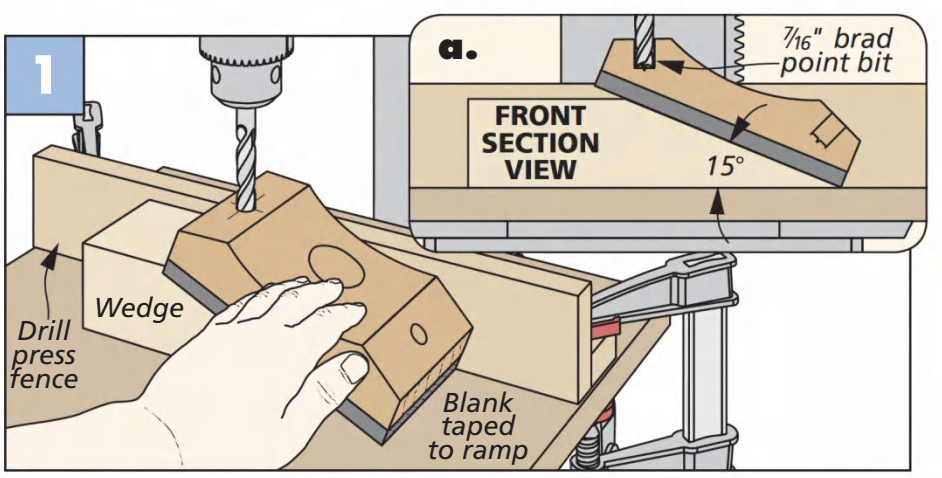

Wedge. Cut a wedge from some scrap to angle the plane body to drill for the knob threaded inserts. Tape the body to the wedge to keep the piece from shifting while drilling.

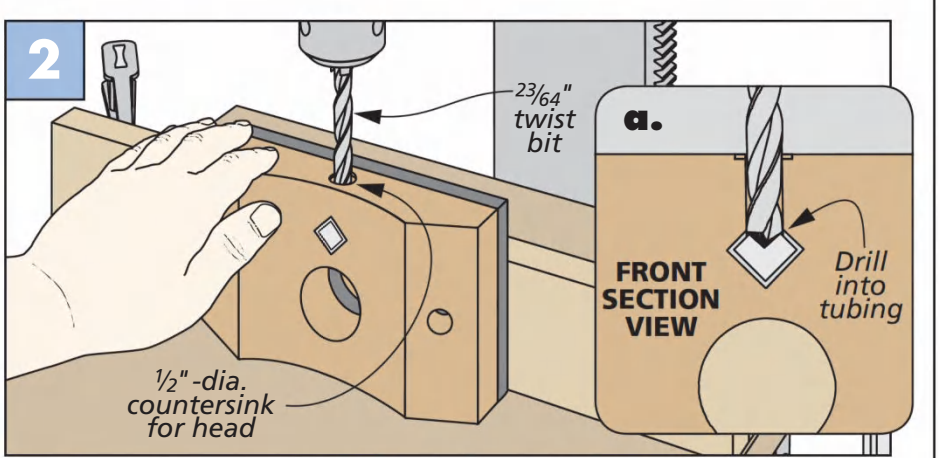

One More Insert. Flip the body on edge and drill through the steel tubing to accommodate the insert that controls the blade setting. A little cutting oil helps the drill bit work better.

square shape of the tubing centered on the hole. With chisels and files, start on the inside and work back to the lines.

Test the fit of the tubing often. I aim for a snug fit where the tubing has to be tapped into place with a mallet. I added some epoxy before driving it home for good. File the top of the tubing flush with the body.

MORE DRILLING. The remaining hole you need to drill is in the back of the body. It's countersunk and houses an insert to secure the blade. The pilot hole needs to extend through the tubing so a knurled knob can apply clamping pressure to the blade, as illustrated in Figure 2a on the previous page. The bit may leave a burr on the inside of the tubing. A small triangular file works well to remove it.

FINAL SHAPING. Use the bottom view drawing shown in the upper right on the previous page to lay out the final shape of the plane. (Feel free to use another shape.) I cut it on the band saw and sanded the edges smooth. Rout a small chamfer around the bottom to ease the edges. And then install the threaded insert in the back.

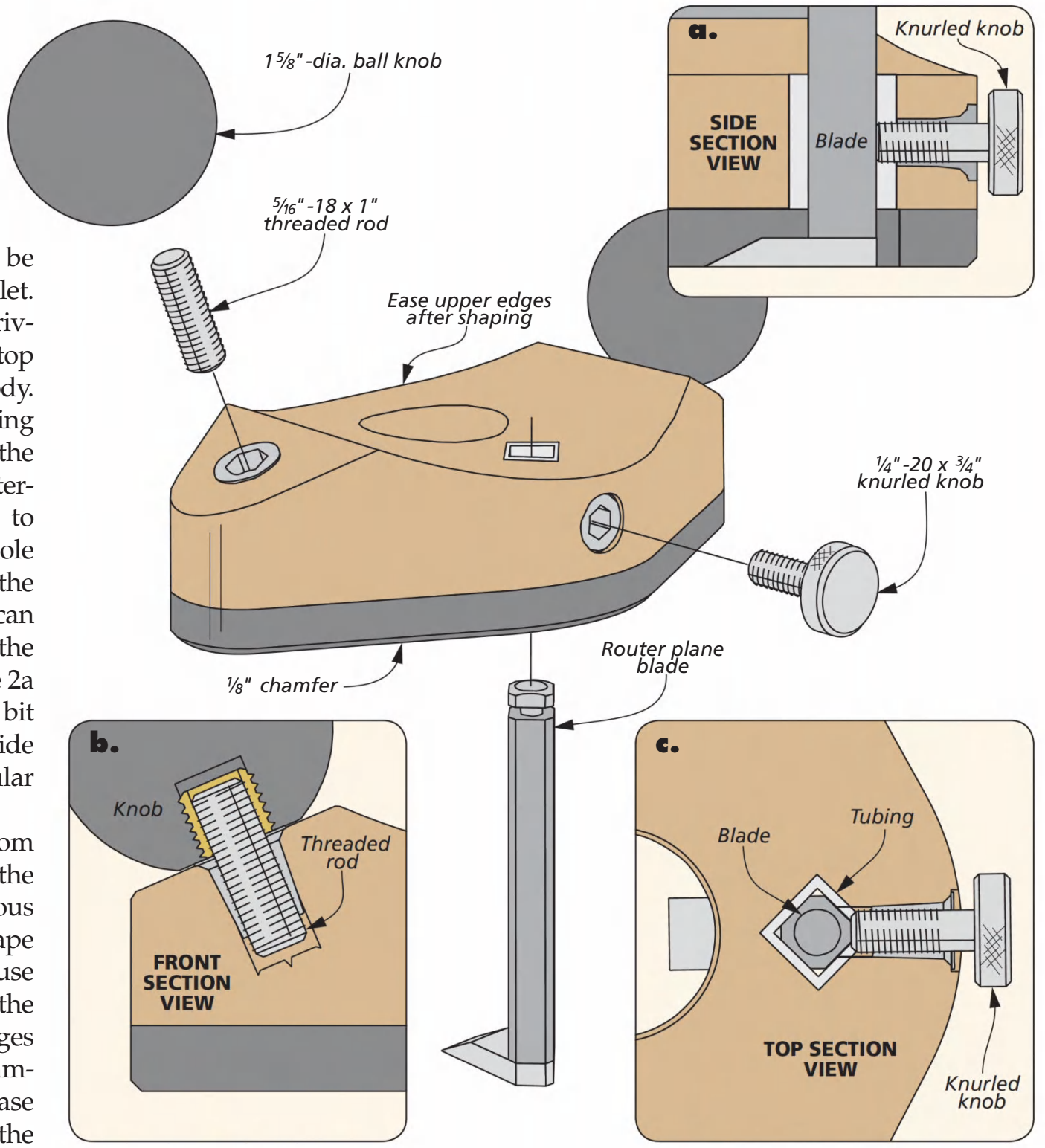

HARDWARE & BLADES

The drawings above highlight what's left in order to complete the router plane. The first item is connecting the knobs. For this, I just cut the heads off a pair of bolts. A thread-locking adhesive applied to the bolt keeps the knobs from working free.

A knurled knob holds the blade in place from the back. There are several sizes of blades to choose from (photo below). I find a 1/8", 1/4", and 1/2" to be the most useful sizes. The blades come sharp and ready to use. So what are you waiting for? W

Materials & Supplies

A	Baseplate (1)	3/8 x 3 1/2 - 6
B	Top (1)	1 1/4 x 3 1/2 - 6

- (2) 5/16"-18 Threaded Inserts
- (1) 1/4"-20 Threaded Insert
- (1) 1/2" x 1/2" - 1" Square Steel Tubing
- (2) 1 5/8"-dia. Rubber-Coated Insert Knobs
- (2) 5/16"-18 x 1" Bolts
- (1) 1/4"-20 x 3/4" Knurled Knob

◄ The router plane blades come from *Lee Valley Tools*, refer to sources on page 65. You'll find blades in a range of widths and shapes. Flat-ended blades get into corners well. The spear-point blade leaves a smoother surface.

Standing Mirror

This bedroom furniture gem delivers plenty of storage. It's easy to keep jewelry organized when you have these options.

At first, glance this project appears to be an ordinary dressing mirror. Yes, it's a little smaller than other mirrors in its category. But if you loosen the hand-made cherry knobs on the sides, you can position the mirror for a perfect view of your attire.

That's when you'll notice that the front is actually a door. A door that opens to reveal a case that holds all of the accessories required for a night on the town. And when the evening is done, no more draping items on the mirror because they have no home.

As for the construction, the mirrored door is a sturdy frame built with open mortise and tenon joinery (also known as a bridle joint). The case has splined miters and a back that's rabbeted in the frame. The stand features graceful legs that are solidly joined to the feet. The thick feet are good looking and a strong foundation for the mirror. Working on those feet

Written & Illustrated by: Erich Lage

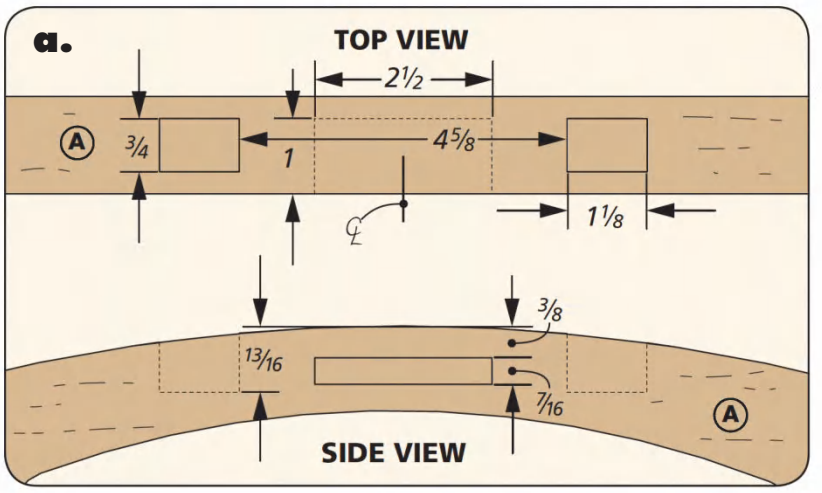

NOTE: *Feet are 1⅜"-thick hardwood. Stretcher is ¾"-thick hardwood*

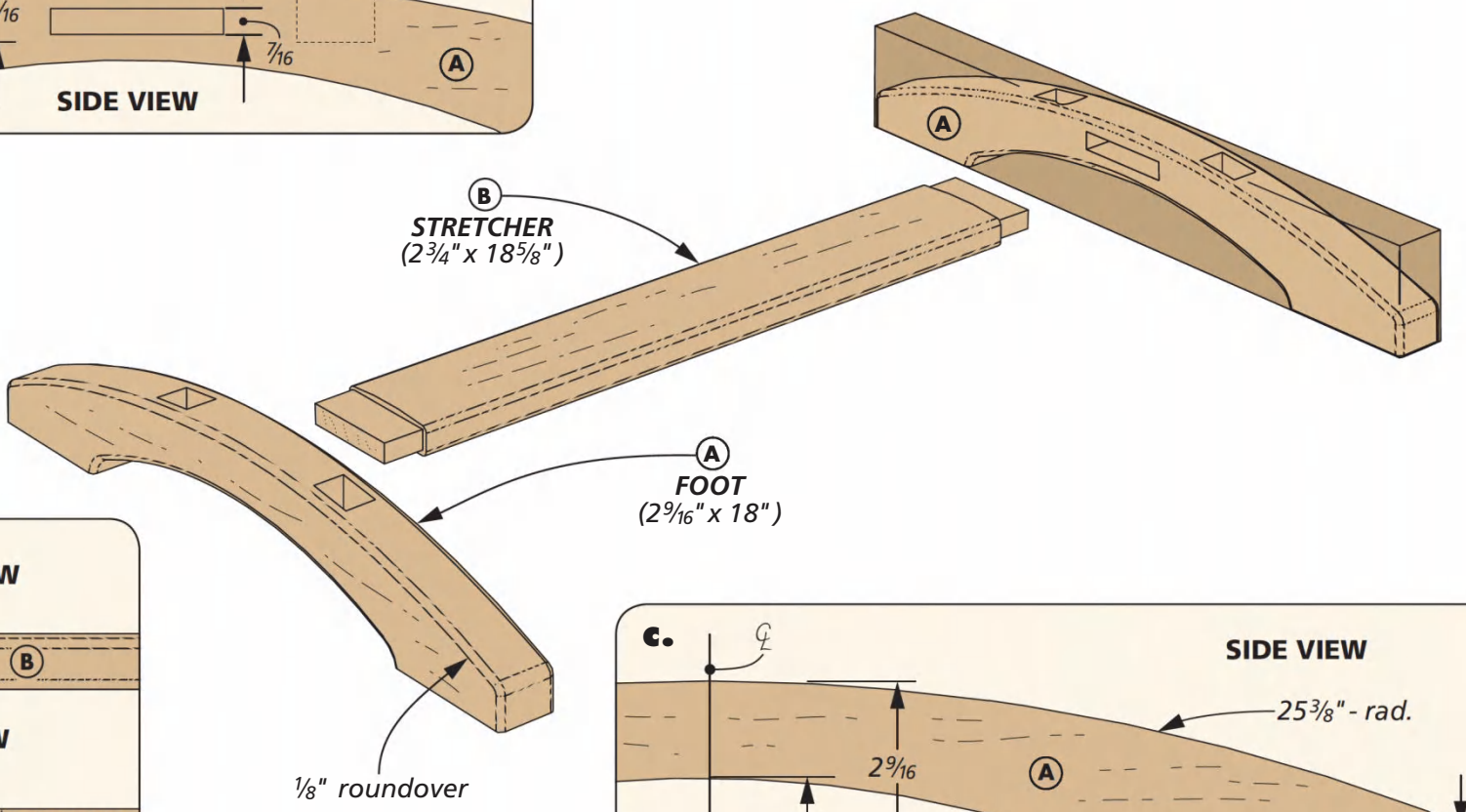

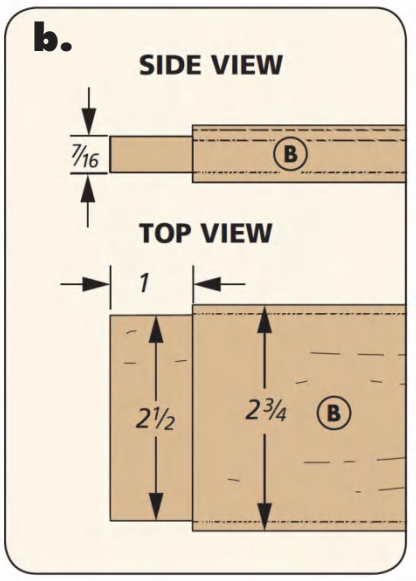

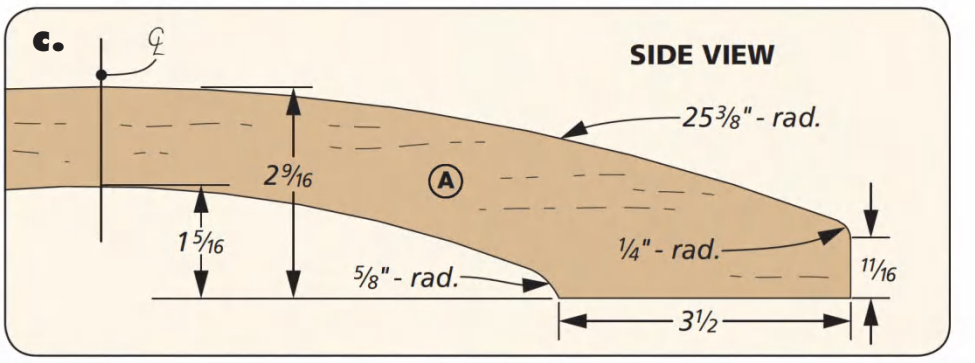

Woodsmith GO ONLINE EXTRAS A full-size pattern for the feet are available at Woodsmith.com

(and the stretcher) over in the shop is where we'll start.

BLANKS FOR THE FEET. As you see in the drawing above, the feet are made from 1½"-thick material and are tied together with a stretcher. Plane these pieces to their final thickness before cutting them to size.

It's a lot easier to make the mortises in the feet while they're still square blanks. Later, you'll use a template to create the final arched shape.

Begin by laying out the location of the mortises on the top and inside faces. Detail 'a' shows the location and depth of these mortises from the top and the side. The mortises are extra deep to account for an arc that will be cut on the top of the feet later.

OVER AT THE DRILL PRESS. You can start by drilling the leg mortises out with a Forstner bit. When those are done, you'll need to change out the bit and lay the blank flat to drill the mortise for the stretcher. After drilling the mortises, square up the corners with a chisel.

Online, you'll find a pattern (along with two others for the legs of the stand) that you can use to make the template for the feet. A piece of hardboard or plywood will work. Just make sure there's enough surface for the bearing of a pattern bit to ride on.

SHAPING THE FOOT. Some double-sided tape holds the template in place. Then over at the band saw, trim the foot close to the template. Complete the profile with a pattern bit installed in your router. Do this in two or three passes if you don't have a long version of this bit. It's the same story for shaping the other foot. Then all that's left to do is round over the edges with an ⅛" roundover bit.

STRETCHER. The wide stretcher that holds the feet together is the next order of business. After cutting it to size, I made the tenons (detail 'b') on the ends at the table saw. Ease the edges of the stretcher with the same roundover bit you used on the feet.

ASSEMBLY. A flat surface is mandatory when gluing up the three pieces you've just made. You want the assembly to sit flat, without any rocking. The posts are next in line.

Project Design: Chris Fitch

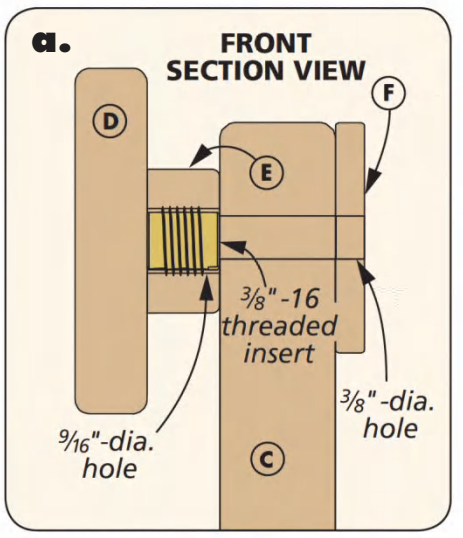

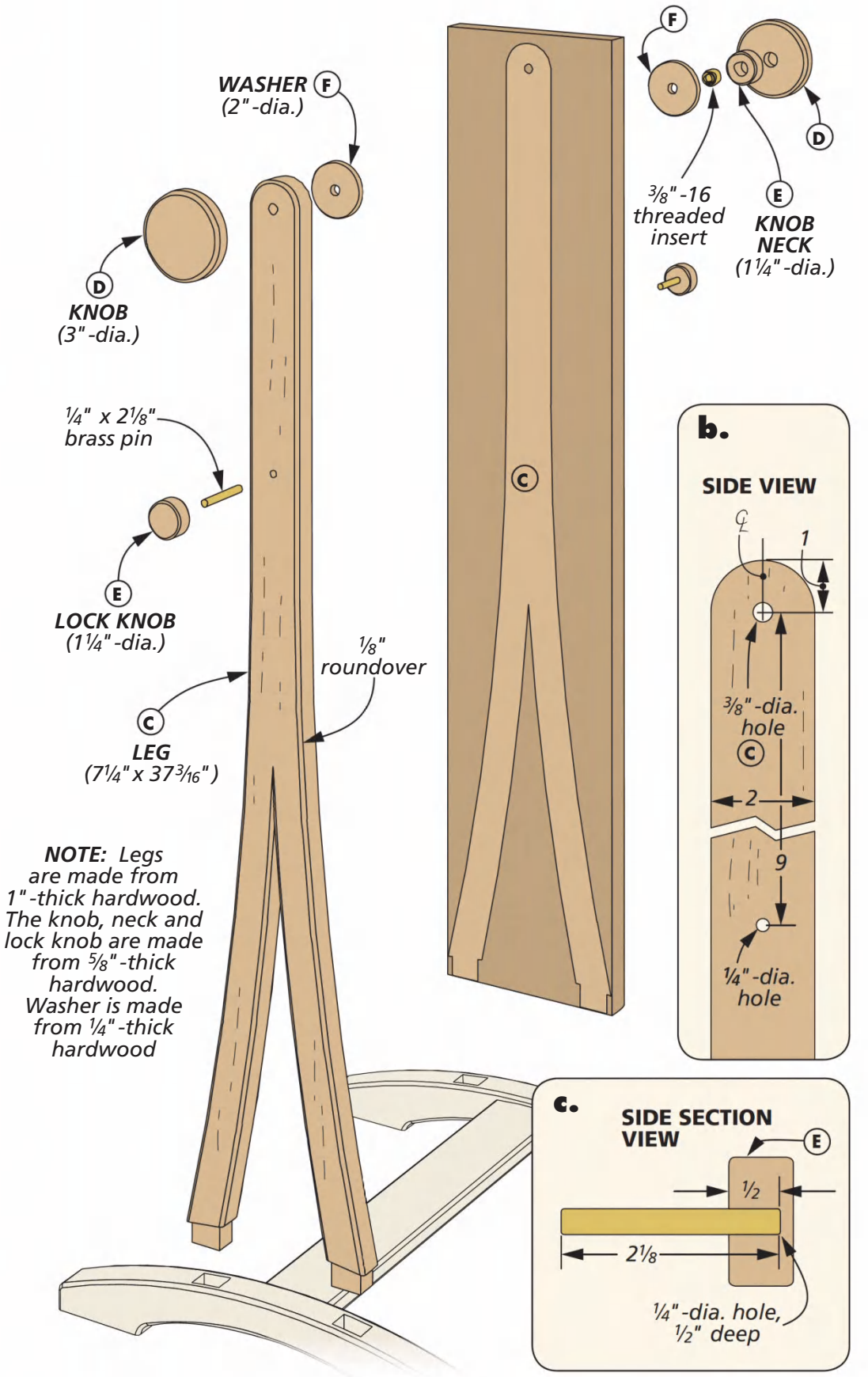

Making the STAND

The legs that hold the mirror case are mortised into the top of the feet you just made. As you see in the drawings here, the legs have a hole near the end for mounting the case to the stand (detail 'a'). As the legs approach the feet, they splay out and have tenons on the end to fit the mortises on the legs. The shoulders on the tenons match the arc created on the top of the feet.

To make this a seamless union, I made two more templates — one for the profile of the leg and a second template for matching the arc between the feet and leg. It sounds a little confusing now, but shortly it will all make sense. The patterns for these templates are online at *Woodsmith.com*.

Woodsmith GO ONLINE EXTRAS

For full-size leg patterns, go to Woodsmith.com

BLANKS. To get the ball rolling, I started with two leg blanks. They're cut to final width, but left a little long. From here, the three drawings you see below will shed light on how to locate the tenons and shape both faces of the leg uniformly.

The first drawing shows the leg template in place aligned with the bottom of the blank. All you're doing here is locating the position of the curved tenon shoulders with a pencil mark.

Next, you want to align and attach the shoulder template to the marks you've made on the blank (second drawing). Then you can rout the cheeks of the tenons using a dado clean-out bit

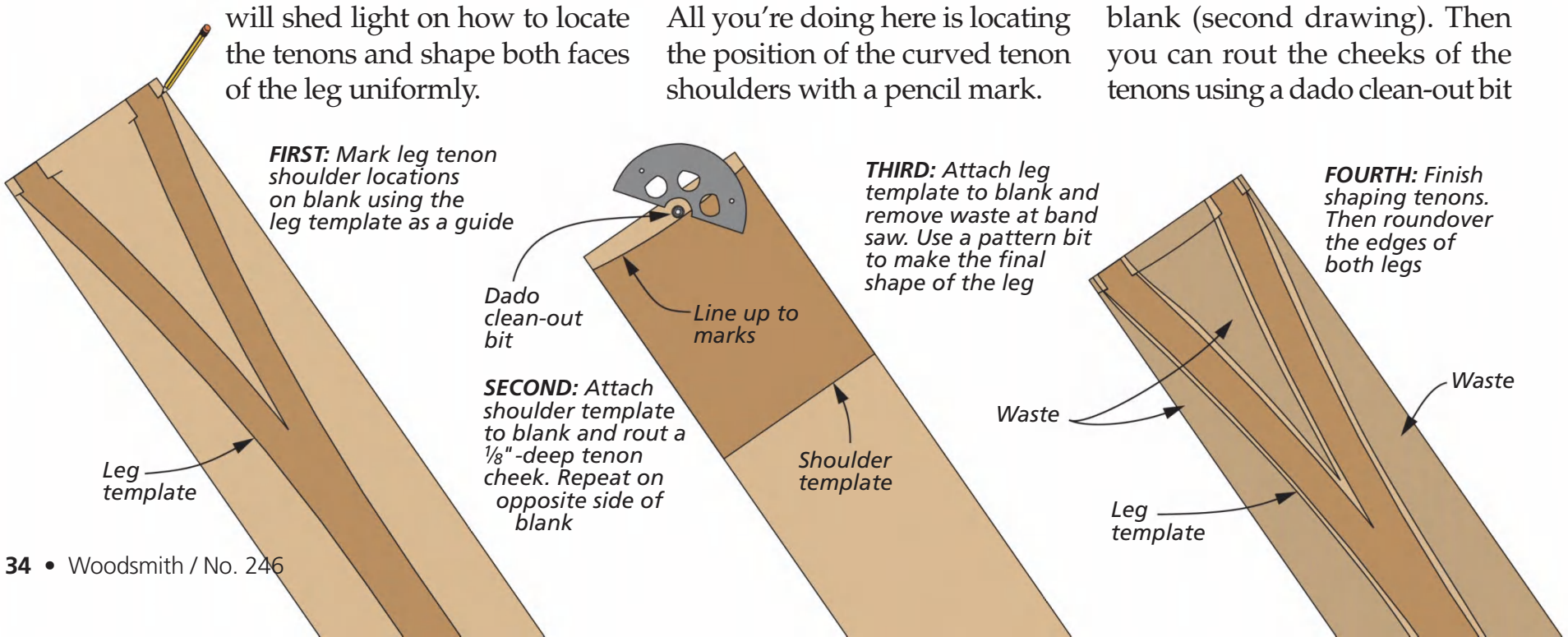

in your router. Repeat this on the opposite face of the blank.

SHAPE THE LEGS. The legs are shaped in the same manner as the feet. As you see in the third drawing, attach the template flush with the bottom of the leg blanks with double-sided tape. When you've finished roughing out the shape, rout it smooth with a pattern bit as before.

I attached a piece of sandpaper to a card scraper to smooth the narrow part of the 'Y'. When all this is done on both legs, round over the edges before moving on.

HAND CUT SHOULDERS. To complete the tenons, I headed to the bench with a hand saw and chisel. There, I trimmed the waste from around the tenons. To finish the leg, lay out and drill the holes for the mounting bolt, and the lock knob pin (detail 'c').

LEG SPACER. At this point, you're ready to join the legs with the foot assembly. To keep everything square, I made a plywood spacer to position the legs while the glue dries (and while you build the rest of the mirror). As you see in the drawing above, the bottom corners of the spacer are clipped to clear the edges of the feet.

Putting the stand together is a bit of a juggling act, so I used slow-setting glue to give me some time to ensure all the parts were aligned. To provide clearance for the clamps, I propped the stand up on some scraps.

ROUND PARTS

Before starting on the case of the mirror, I had some round parts to make. A pair of two-part knobs and wood washers allow the case to pivot. And a pair of lock knobs with brass pins that prevent the case from moving when you open the door.

All the parts are made from hardwood blanks. The knobs and the washers are made using a pair of templates (Figure 1). The templates are made with a wing cutter and then used to trim the knob and washer to size (Figure 2). The knob is connected to a smaller neck. The neck is the same size as the lock knob, so make four of these. I used a hole saw without a center bit to create these. See Figure 3 for this step.

The difference between the lock knob and the neck is the center hole. The neck has a through hole for a threaded insert, and the lock knob has a stopped hole for a brass pin. I drilled these holes before removing the neck and knob from the blank (Figure 4).

ASSEMBLE & FINISH. To finish the knob, glue the two pieces together and install the threaded insert using epoxy. Glue the pin to the lock knob as well. Now it's on to building the case.

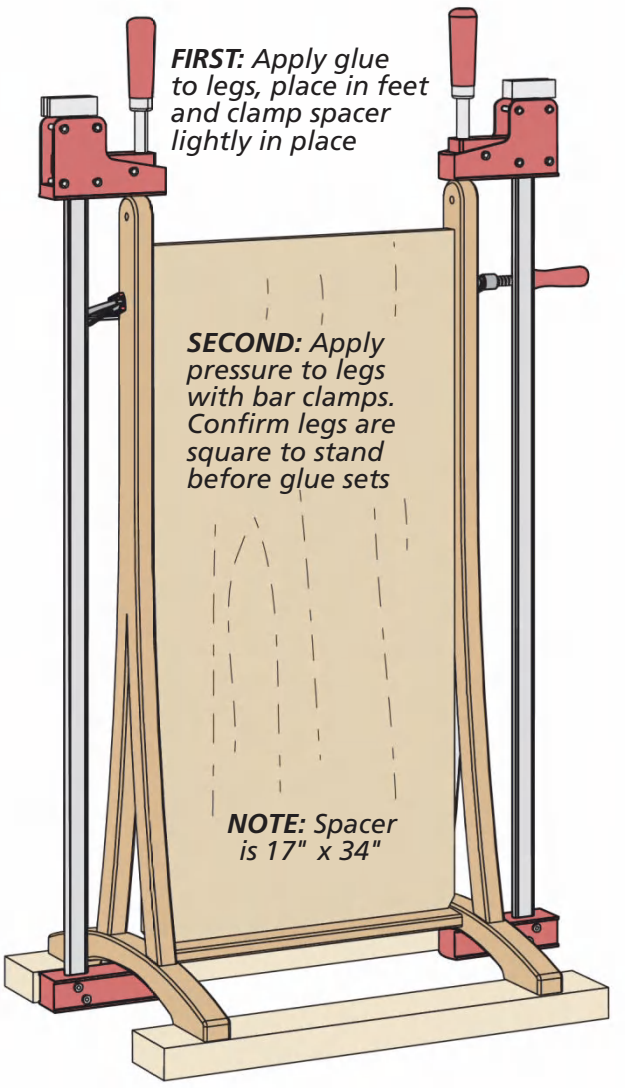

MAKING THE KNOBS

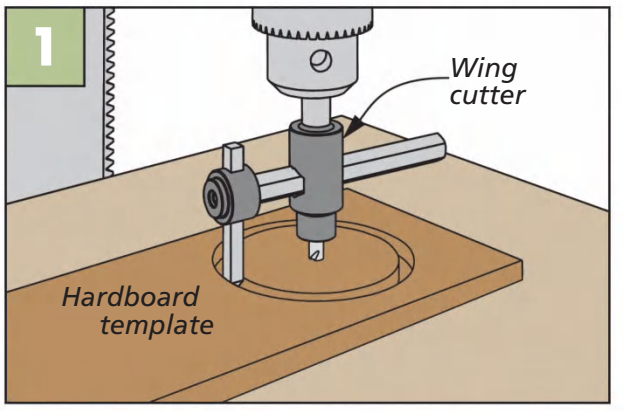

Template. At the drill press use a wing cutter to make the two templates for the knobs and the washers.

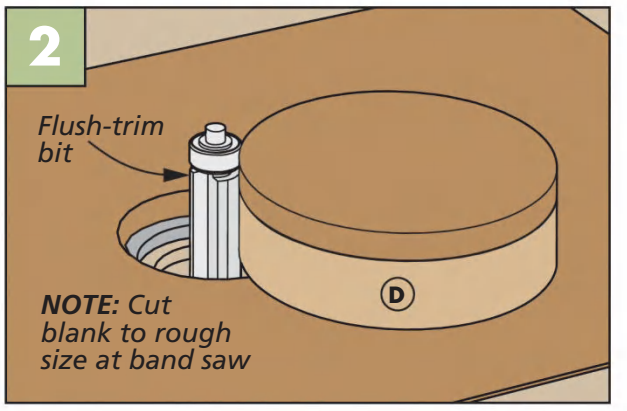

Router Table. With a flush-trim bit in your router table, attach the template to the blank and rout it smooth.

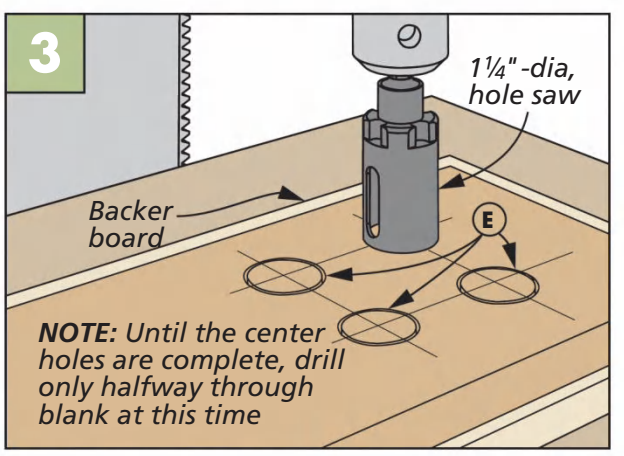

Shape First. The parts for the neck and lock knob are made at the drill press with a hole saw. Don't drill through the blank.

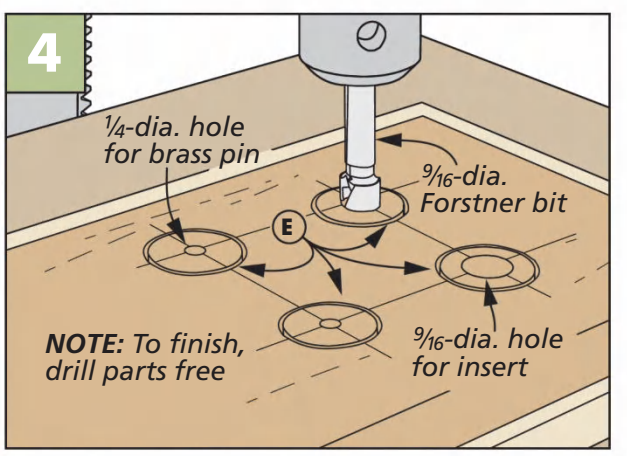

Small Hole. Drill the through hole with a Forstner bit in the neck pieces. Use a twist drill bit for the lock knob.

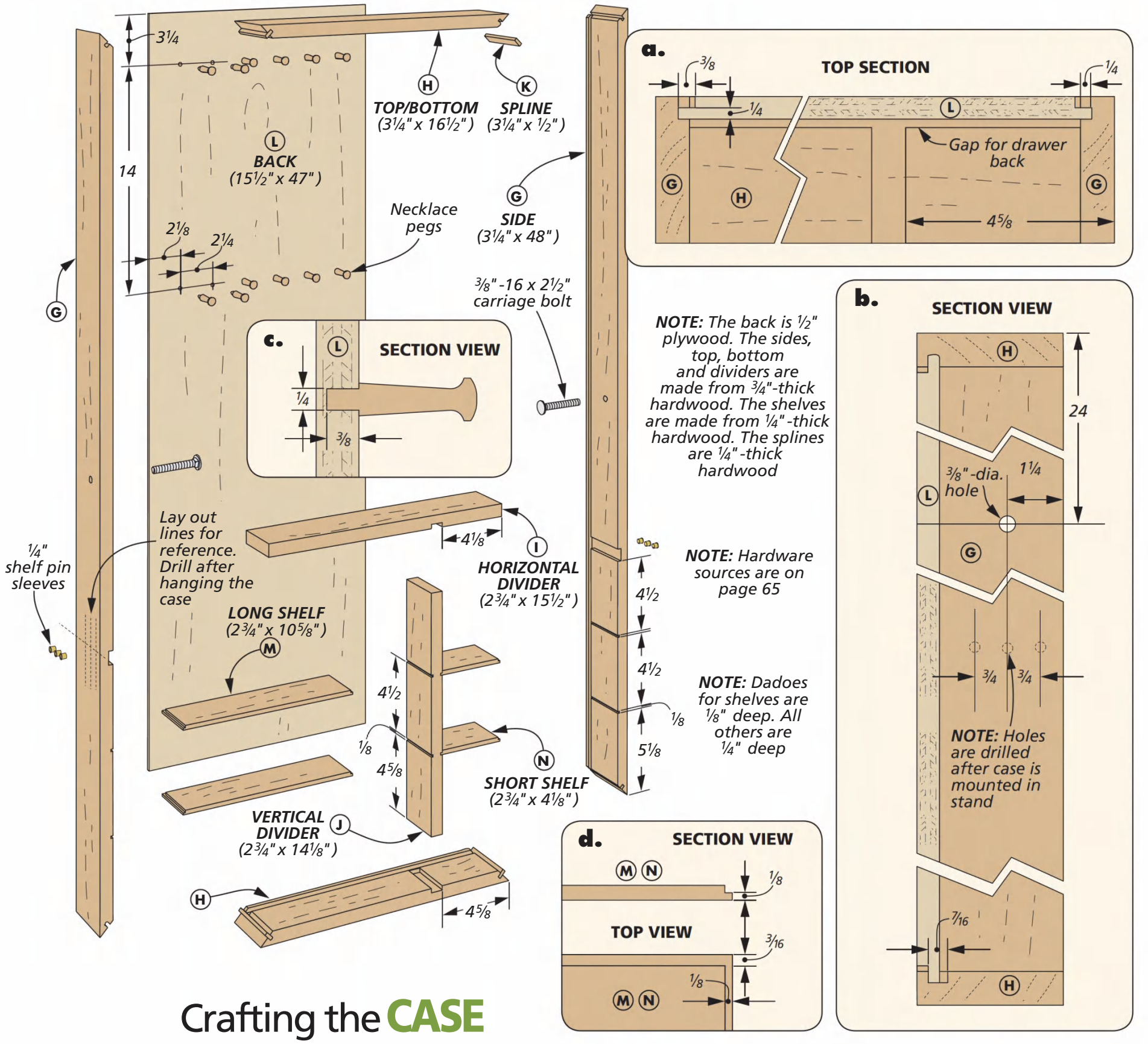

Crafting the CASE

The case for the standing mirror is just a shallow box suspended by a pair of bolts through the stand you just finished making. As you see in the drawing above, it's made up of a solid wood frame and a plywood back.

You'll notice in detail 'a' above that the back is rabbeted to fit in a groove in the case. The rabbet is wider than the depth of the groove. This creates a shadow-line around the outside of the back panel, giving it a finished look. (Detail 'a' at the top of the next page shows what this looks like from the back of the case.)

At the front of the case, you can see that I've mitered the corners and added splines for strength. It also makes an interesting detail in the corners. Inside the case are some pegs, a couple of dividers, and some shelves to hold trays that you'll make in a little while. You could turn the pegs, but in this case I bought some that worked just fine (refer to Sources on page 65).

CASE FRAME FIRST. After setting up the table saw, I focused on the case frame parts by cutting them to size. Note that the dividers are narrower.

Then install a dado blade and cut a groove on the inside face of the case parts to hold the plywood back. Looking at the bottom of the case in the main drawing and detail 'b,' you see that the groove for the case bottom is wider. This provides a notch to receive a lip on the back of the jewelry trays that you'll make later. Detail 'c' above shows a top view of the shelves that have a similar rabbet in the back for the trays.

STOPPED DADOES. Stopped dadoes for the dividers and the shelves are routed into the case sides

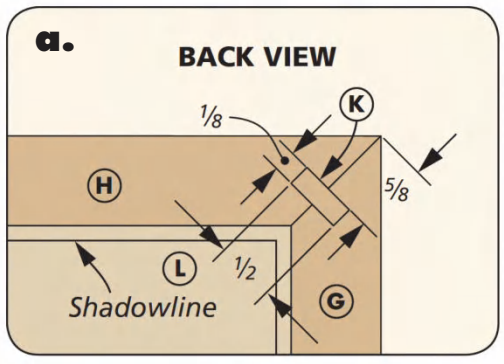

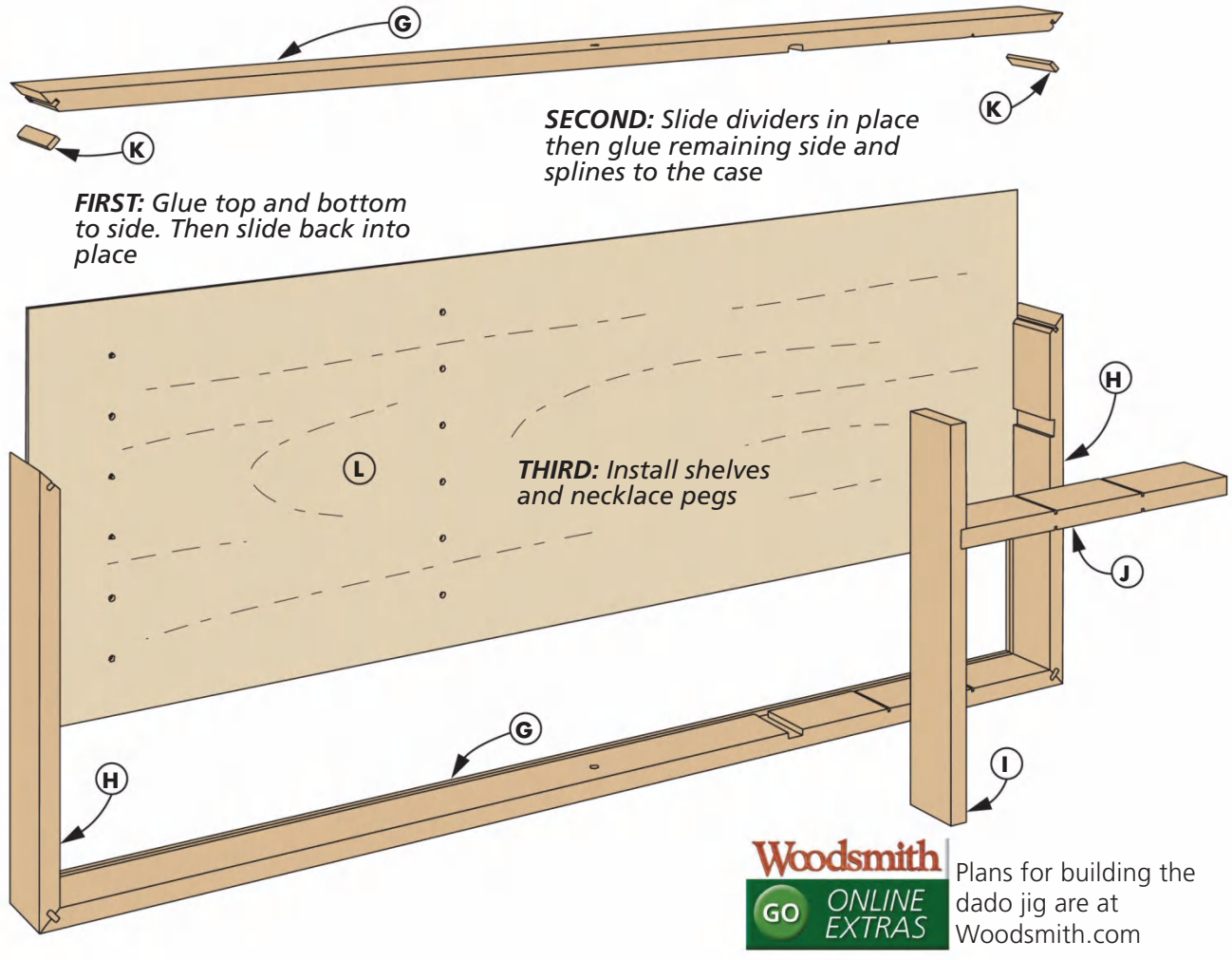

Woodsmith GO ONLINE EXTRAS Plans for building the dado jig are at Woodsmith.com

(detail 'a,' previous page). I used a bushing and ¾" bit in my router to make these dadoes, along with a simple jig that you'll find online with the other patterns.

When the dadoes for the dividers are done in the case sides, change over to an ⅛" bit to make the dadoes for the shelves. Clean up the ends of both with a chisel. The dadoes in the dividers are through dadoes and are easily done at the table saw. Next I drilled a hole in the case sides (detail 'b') for the carriage bolt.

MITERS. To make the miters in the ends of the frame pieces, tilt the blade on your table saw and use a long auxiliary fence on your miter gauge to support the parts. While the blade is tilted, cut the slots in the faces of the miters for the splines. The splines are made from cutoffs of the case side pieces that I planed to thickness.

THE BACK. The plywood back is rabbeted along all four edges. Once that's done, lay out and drill the holes for the pegs. I used a stop collar on my drill bit to prevent it from drilling through the back (detail 'c').

ASSEMBLY

Assembling the case is a challenge that requires some preplanning, dry fitting of parts and using a slow set glue. A rehearsal before going "live" with glue might seem silly, but it's much better than the panicky frustration of "Where's that other spline?"

With the workbench cleared of all unnecessary items and one of the sides lying on the surface, you can follow the sequence shown in the drawing above to assemble the case.

SHELVES. It's time to make the shelves that support the jewelry trays. Plane all the material to thickness, then rabbet the back and ends. Note the wider rabbet along the back (detail 'd,' previous page). Then you can glue them in place.

HOLES FOR LOCK PIN. The case is attached to the stand with a pair of carriage bolts (the main drawing on the previous page shows this).

After hanging the case in the stand you can drill the final three holes on either side. These holes are for a pair of lock knobs that keep the case from moving when the door is open.

I laid out the hole locations after assembling the case. Mark them through the hole in the stand (like you see in the box to the left), then drill them outside the leg. With that deed done, you can turn your attention to the door and trays.

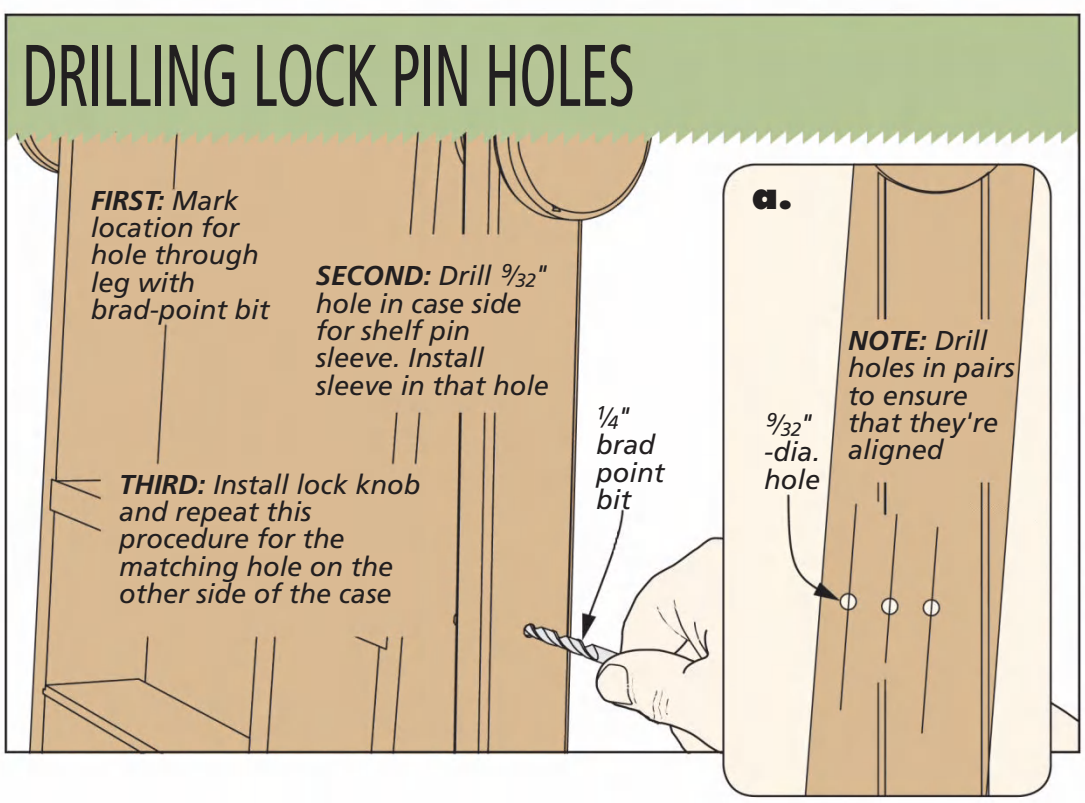

▲ The lock knob fits through the leg of the stand and supports the case while the door is open.

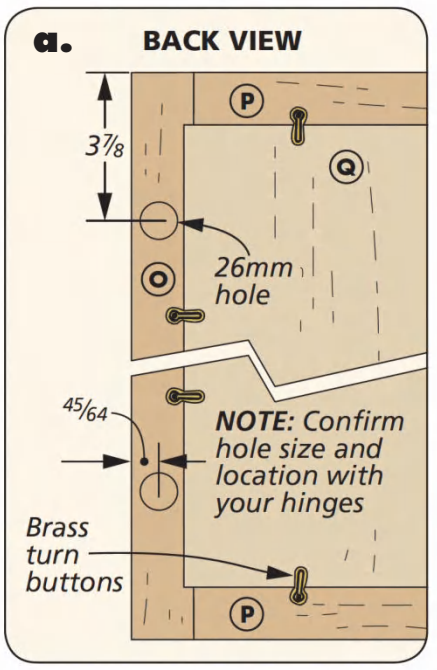

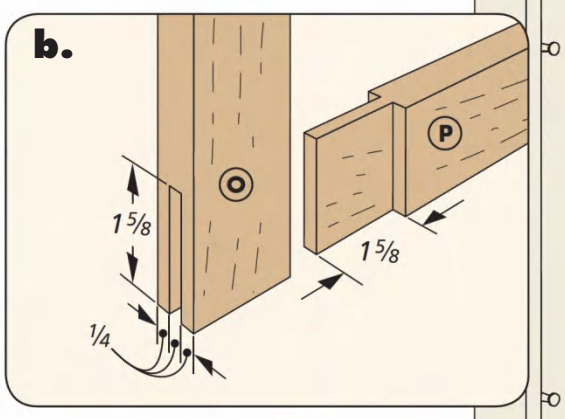

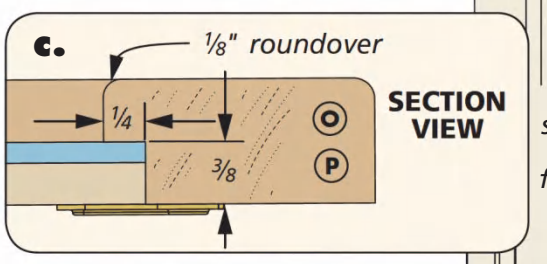

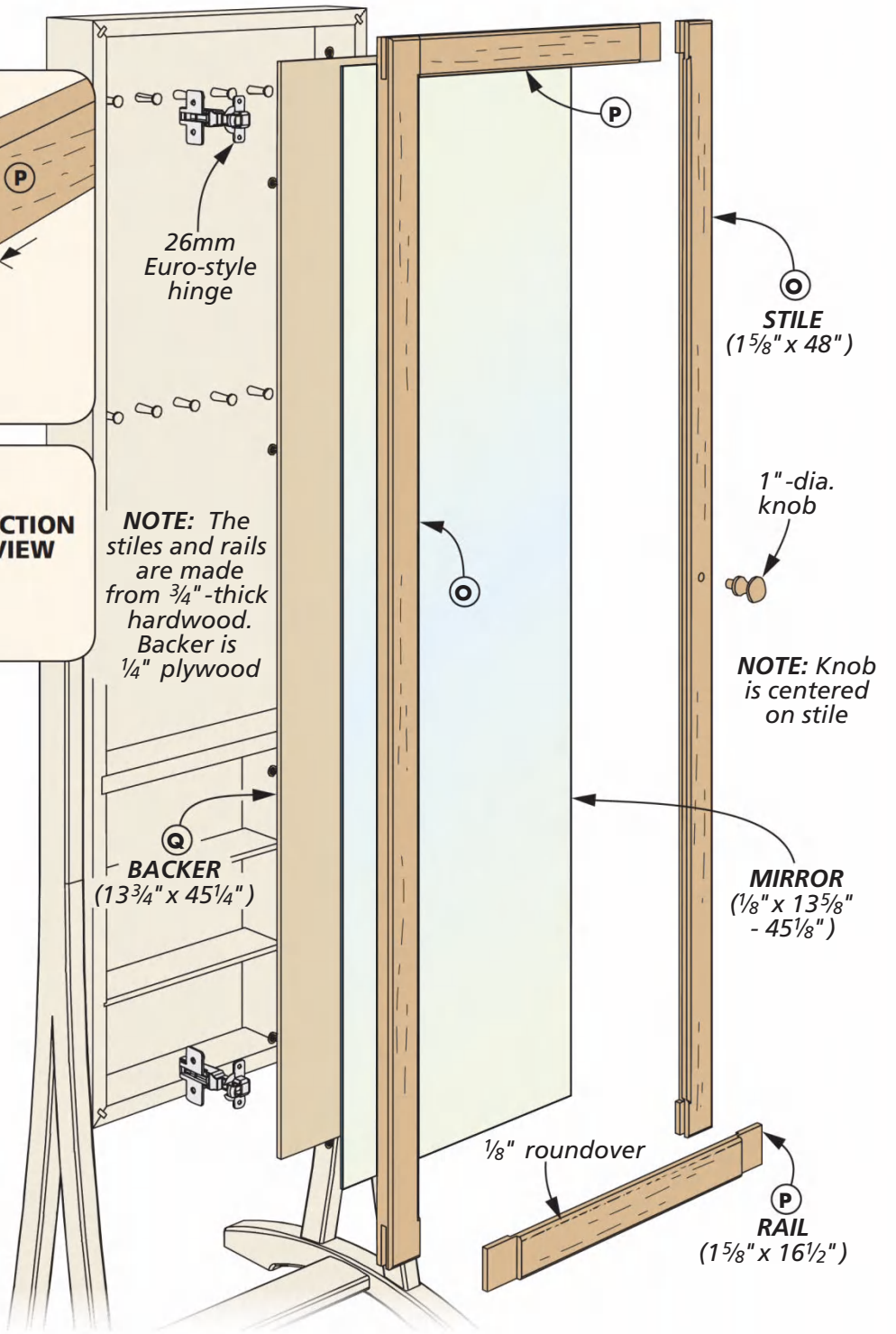

Lastly **DOOR & TRAYS**

The door, like the box, needs to be strong. In this case, it's to support the mirror that's inset from the back. The joinery that's up to this task is a bridle joint. Detail 'b' above shows this joinery. An advantage of this joint is that it offers lots of glue surface for iron-strong corners.

Later, we'll attach the door to the case with mini Euro-hinges. Then, we'll complete the building phase with making the trays that are housed in the case. First up, the door frame.

OPEN MORTISE. Sizing the frame parts is the first order of business. Then you can focus on the joinery. To cut the open mortises in the ends of the stiles, I made a jig that you see in the box below. It's a tall carriage that straddles my rip fence. There's a cleat on the back to hold the stile 90° to the table. With the jig in place, set the distance for the mortise and pass the stile over the blade. Repeat this process on the opposite end and other stile.

TENONS. The tenons on the rails are done at the table saw with the miter gauge supporting the rail while the fence acts as a stop to create the shoulders. Size the tenons for a sliding fit into the open mortises in the stiles. Then with clamps, glue, and squaring guides at hand, glue up the frame of the door.

RABBET FOR MIRROR. A rabbeting bit in your router will make short work of creating the rabbet to hold the mirror (detail 'c'). Square the corners where the bit can't reach. With that done, it's a good time to cut the plywood backer for the mirror to size.

Use a roundover bit to ease the front edge and mirror opening as you did with the base earlier. There are some holes to drill as well. One on the front for the knob, and two in the back for the hinges (detail 'b').

STAIN & FINISH FIRST. To avoid masking off the mirror, stain and finish the frame and backer before installation. (Add a few dabs of silicone in the corners of the opening to prevent the mirror from rattling.) I used a cherry gel stain and applied two coats of lacquer. The turn buttons you see in detail 'a' hold the mirror and backer in place.

Woodsmith GO ONLINE EXTRAS

For plans on the mortising jig, go to Woodsmith.com

CUTTING AN OPEN MORTISE

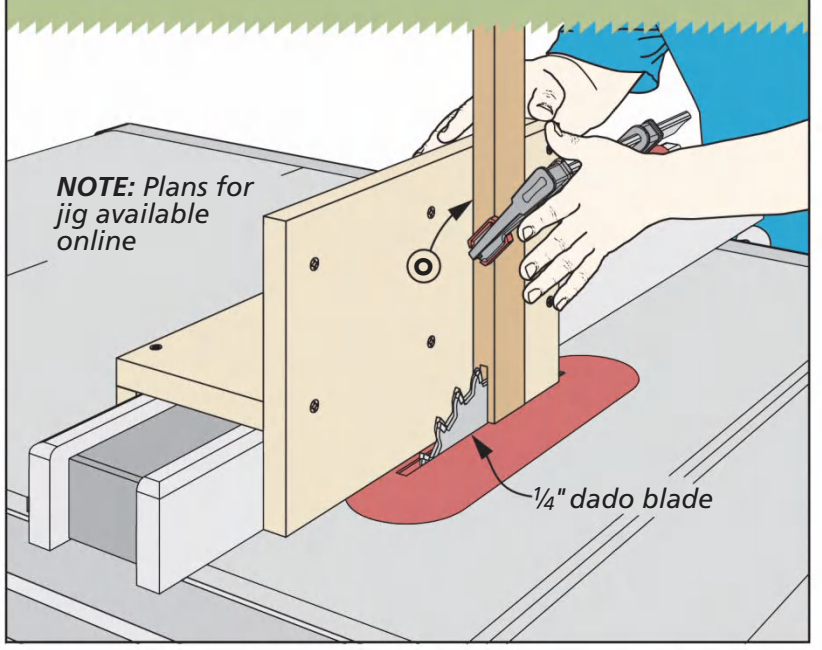

TRAYS

There are two sizes of trays, but the construction is identical on both. The pieces are planed and cut to size, then glued up with simple butt joints. You'll notice in detail 'a' that the back extends below the bottom to create a tongue that locks into the groove in the case and shelves. Also, the front of each tray has a shallow cutout to serve as a finger grip.

Assembling the trays completes the building stage. After sanding and finishing the trays, I hung the door in the case. Then it was time to move the standing mirror to its new home. When all is said and done, this charming little multi-tasker is sure to be a welcome addition in the corner of any bedroom. W

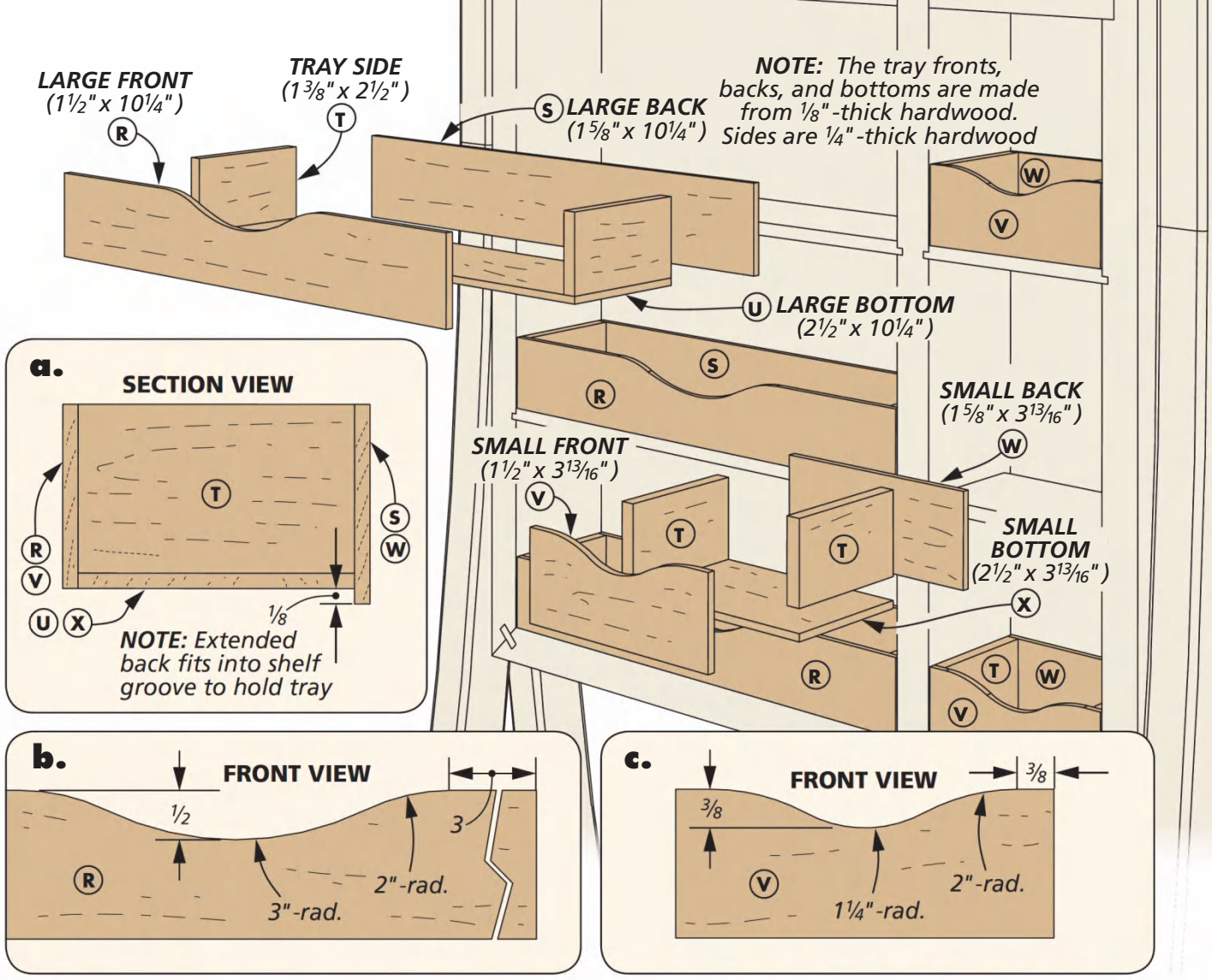

Materials, Supplies & Cutting Diagram

A	Feet (2)	1⅜ x 2⁹⁄₁₆ - 18	L	Case Back (1)	½ ply. -15½ x 47	W	Small Tray Backs (3)	⅛ x 1⅝ - 3¹³⁄₁₆
B	Stretcher (1)	¾ x 2¾ - 18⅝	M	Long Shelves (2)	¼ x 2¾ - 10⅝	X	Small Tray Bottoms (3)	⅛ x 2½ - 3¹³⁄₁₆
C	Legs (2)	1 x 7¼ - 37³⁄₁₆	N	Short Shelves (2)	¼ x 2¾ - 4⅛	•	(2) ⅜"-16 x 2½" Carriage Bolts	
D	Knobs (2)	⅝ x 3 - 3	O	Stiles (2)	¾ x 1⅝ - 48	•	(2) ⅜"-16 Threaded Inserts	
E	Necks/Lock Knobs (4)	⅝ x 1¼ - 1¼	P	Top/Bottom Rails (2)	¾ x 1⅝ - 16½	•	(2) 26mm Euro Hinges	
F	Washers (2)	¼ x 2 - 2	Q	Mirror Backer (1)	¼ ply. - 13¾ x 45¼	•	(1) Mirror (⅛" x 13⅝" - 45⅛")	
G	Case Sides (2)	¾ x 3¼ - 48	R	Large Tray Fronts (3)	⅛ x 1½ - 10¼	•	(12) Brass Turn Buttons	
H	Case Top/Bottom (2)	¾ x 3¼ - 16½	S	Large Tray Backs (3)	⅛ x 1⅝ - 10¼	•	(12) Miniature Shaker Pegs	
I	Horizontal Divider (1)	¾ x 2¾ - 15½	T	Tray Sides (12)	¼ x 1⅜ - 2½	•	(1) 1"-dia. Wood Knob	
J	Vertical Divider (1)	¾ x 2¾ - 14⅛	U	Large Tray Bottoms (3)	⅛ x 2½ - 10¼	•	(2) ¼" x 2⅛" Brass Rods	
K	Splines (4)	¼ x 3¼ - ½	V	Small Tray Fronts (3)	⅛ x 1½ - 3¹³⁄₁₆	•	(6) ¼" Shelf Pin Sleeves	

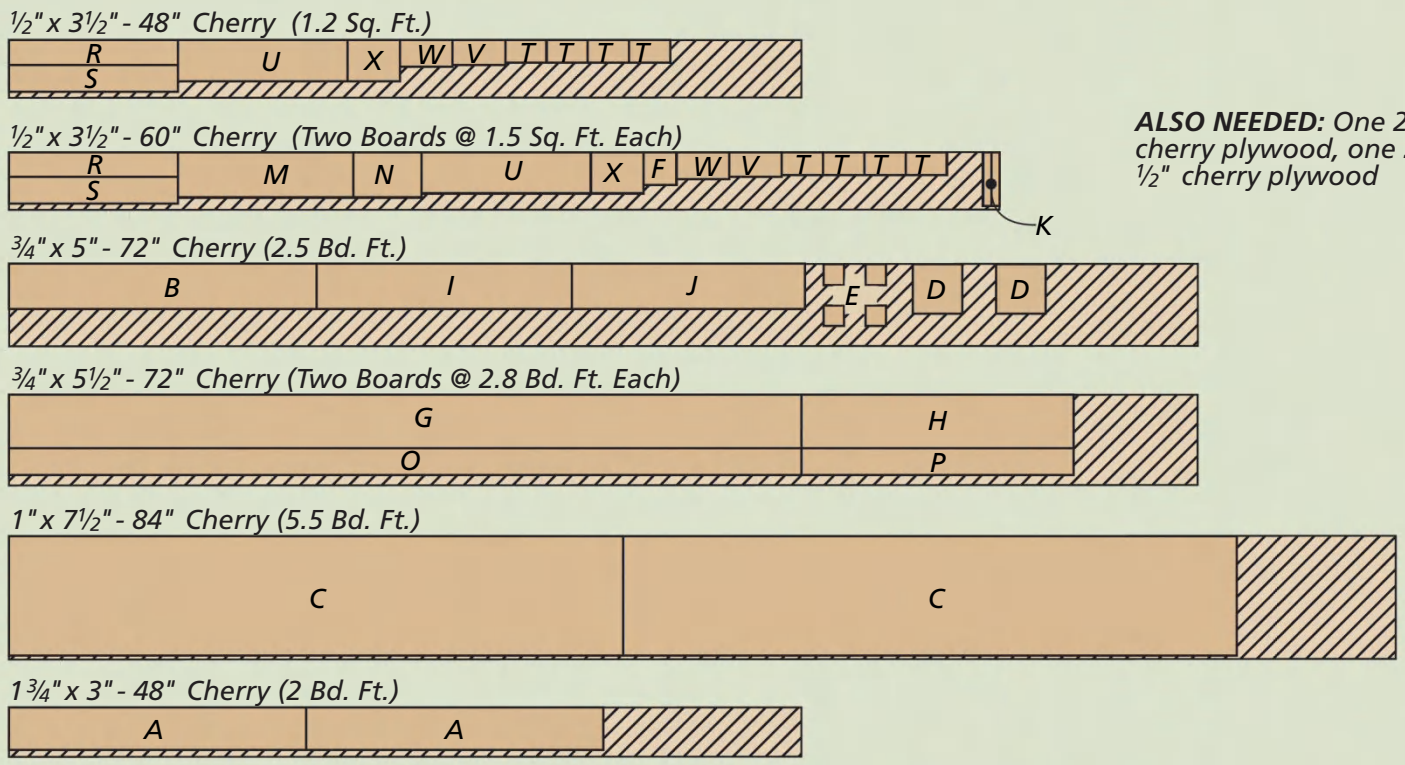

ALSO NEEDED: *One 24" x 48" sheet of ¼" cherry plywood, one 24" x 48" sheet of ½" cherry plywood*

Candle Centerpiece

Short on ideas for gifts? Here's an elegantly simple project that can be made in multiples in the blink of an eye.

Handmade gifts are always a hit. Especially one as charming as this candle holder. Its beautiful but understated look makes it a good candidate for lots of spots around the house. It can easily make its home in the middle of a dining table, residing on a fireplace mantel, or lighting up a window. All this with the added benefit of using up those thick scraps in your lumber bin that you just can't bear to toss in the fire pit.

For this project, I made a trio of holders out of white oak, maple and cherry — all species that will play well in any furniture setting. As you see in the photo above, the holder is divided in three sections and has some subtle shaping going on.

The finish on the pieces is a combination of techniques that make each holder pop. We'll get to that in a little while. For now, let's head to the place in the shop where you store leftover lumber.

The holder starts as an 8/4 blank. (Or, if it strikes your fancy, you can glue up the blank out of smaller scraps.) You'll need a blank that is over four inches wide and at least 14" long. Then it's off to the jointer to square it up on one edge.

Written by: Erich Lage; Project Design: Dillon Baker

Make the **BLANK**

If you take a look at the main drawing at right, you'll note that the edges of the holder are straight and square. But to give the holder an eye-catching look, the ends are beveled and a series of dadoes are cut into the top and the edges, dividing the candle holder into three more or less equal sections.

BEVEL THE ENDS. To create this look, I started by ripping the blank to width and length. The ends of the holder are beveled at 15°. In order to cut these bevels, I used an auxiliary miter gauge fence with a stop block clamped to it. Start by cutting a bevel on one end. Then flip the blank to trim the other end. Figure 1 in the box below shows how to do this.

CREATE SOME DIVISION. To give a visual break to the sweeping curves of the candle holder, I added some narrow dadoes, as you see in detail 'b.' They divide the holder into three sections and are easy to make at the table saw (Figure 2).

Use your dado blade to cut the ¼" dadoes in the top and edges of the blank (detail 'a'). An auxiliary fence on the miter gauge backs up the blank, while the rip fence acts as a stop. Flip the blank end for end to cut the dadoes at the other end.

Notice that the dadoes are only in the top and edges. I didn't cut dadoes on the bottom of the holder for the simple reason that the bottom will be shaped later with a decorative curve.

At this point, you've finished all the straight cuts. Now it's time to throw some curves into this project. So turn the page to see how this is done.

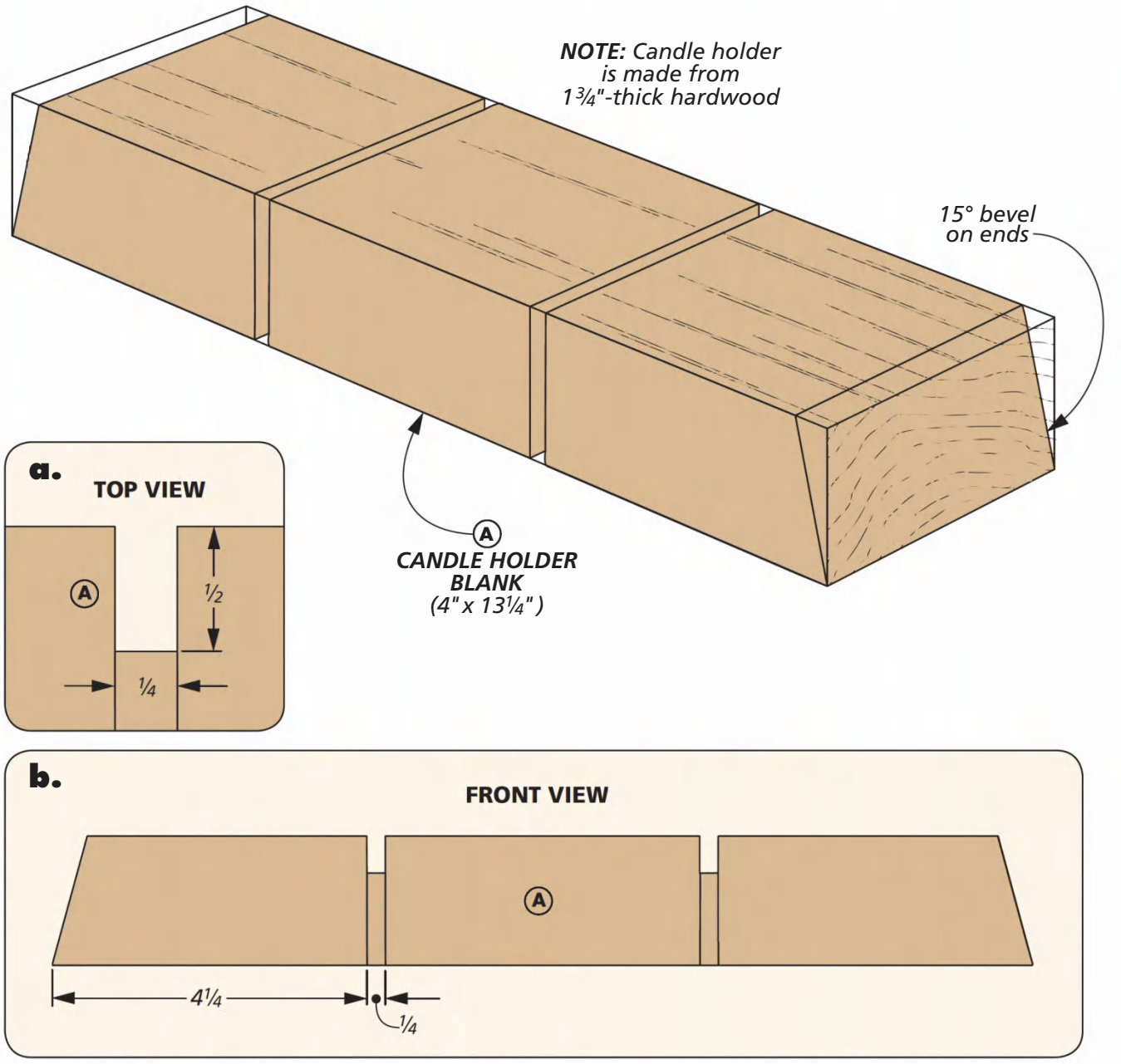

START THE SHAPING

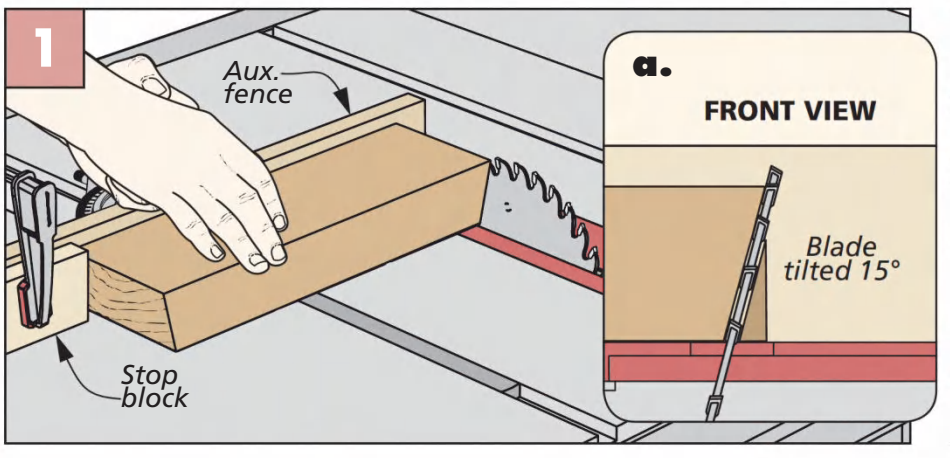

Bevel the Ends. Tilt the blade of your table saw and use your miter gauge to trim the blank. To position the workpiece, clamp a stop block to the auxiliary fence.

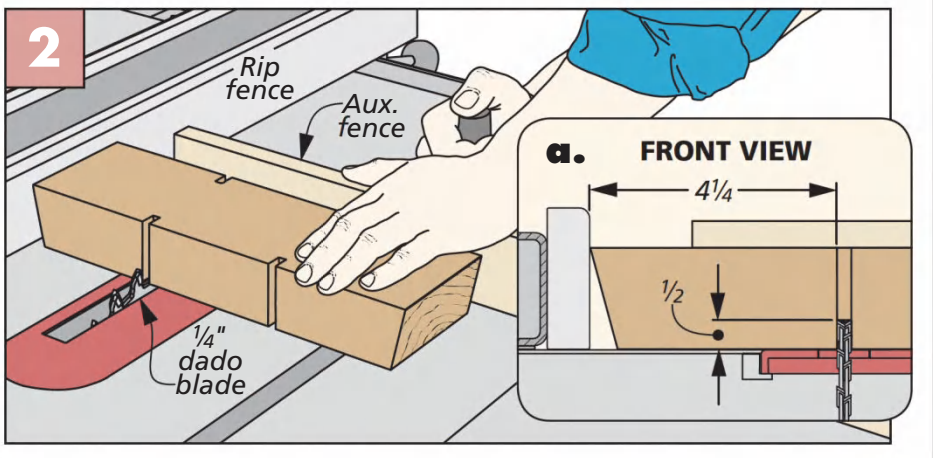

Divisions with a Dado. After installing your dado blade, use your rip fence as a stop and make the dividing cuts in the holder. Flip the workpiece end for end to complete the process.

Illustrations: Dirk Ver Steeg

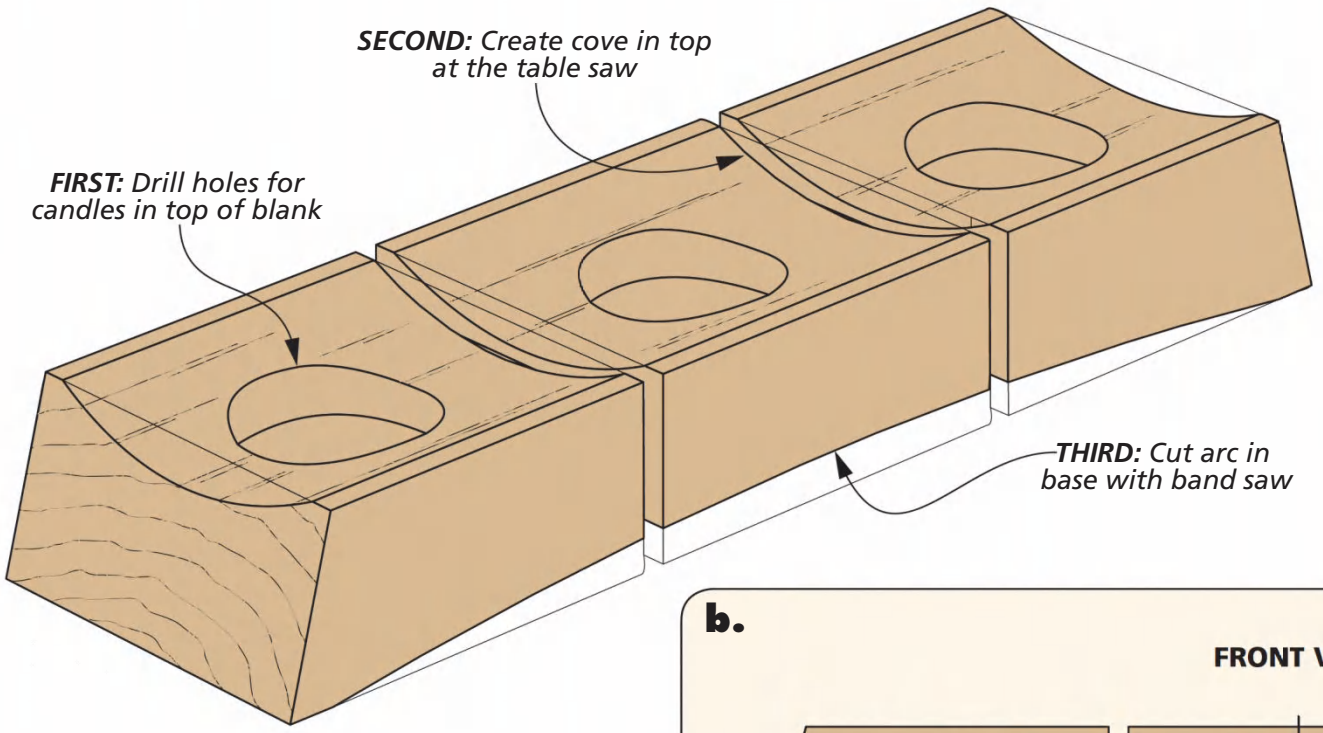

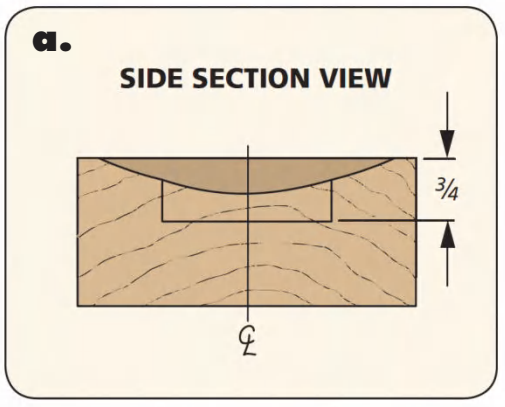

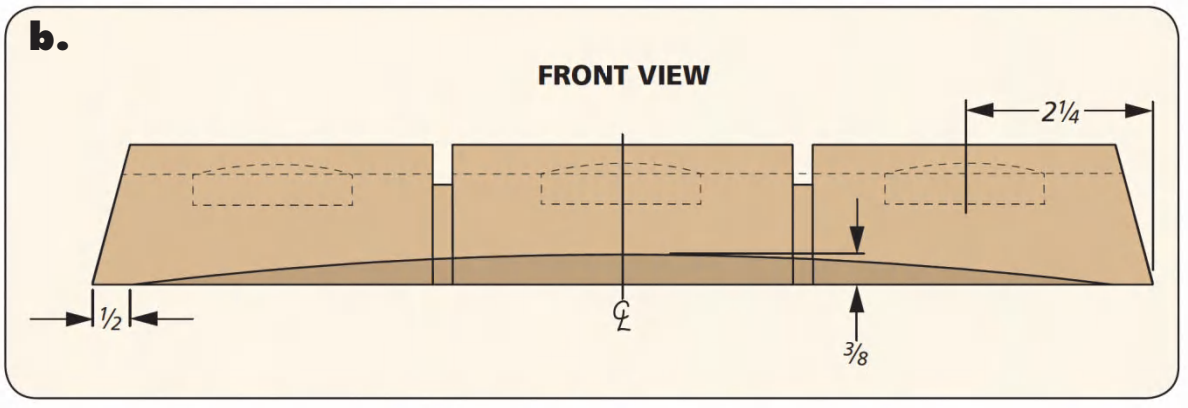

Creating the COVE & ARC

Circles, curves, and arcs are the tasks left on this project. Nothing to fear though, we'll ease into the process with some simple circles (holes) for the candles.

These holes are large enough to accommodate candles and glass candle holders. Doing so gives you options for how you want to dress out this project.

DRILLING HOLES

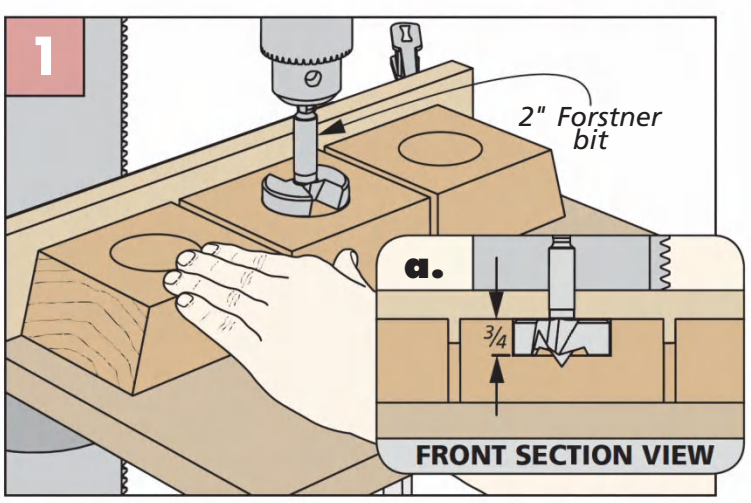

Holes for Candles. A Forstner bit is used to make the holes for the candles. Back the bit out of the hole often to clear out shavings.

HOLES. Detail 'b' above shows the locations for the three holes in the top of the blank. As you see in the box below, the easy way to do this is at the drill press with a Forstner bit. You should have the glass candle holders on hand for exact sizing.

COVE. The next step is more involved. You need to create the shallow cove that runs the length of the top of the candle holder. Passing the blank over the table saw blade at an angle is the easiest way to do this.

To prepare for this operation, you have to position and clamp an angled fence to your saw. Then to establish the correct angle needed, you'll use a simple shop-made gauge.

The box at the top of the next page shows what you need to do. I'm going to add more information to each of these steps.

A HANDY GAUGE. The gauge is a parallelogram that's comprised of two long and two short boards. They're held together with bolts and wing nuts.

The long boards should be long enough to draw a line sufficient to locate the angled fence. Size the short boards so they're long enough to allow for the width of the cove you're cutting.

FIND THE ANGLE. As shown in Figure 1 on the next page, there are several things that you need to do to find the angle for the fence. First, set the height of the blade to the depth of the cove you're making (3/8" for this project).

Next, at the front and back of the blade, mark where the teeth emerge from the insert plate with masking tape. Now you need to lock the gauge to the width of the cove (3½" in this case, as you see in Figure 3b).

Position the gauge over the blade and align it with the tape at both ends of the blade. This is the angle for your fence. Draw a line along the edge of the gauge long enough for an accurate placement of the fence.

SET THE FENCE. Remove the gauge and tape — they've done their duty. Now you need to draw a

CREATING A CRISP, CLEAN COVE

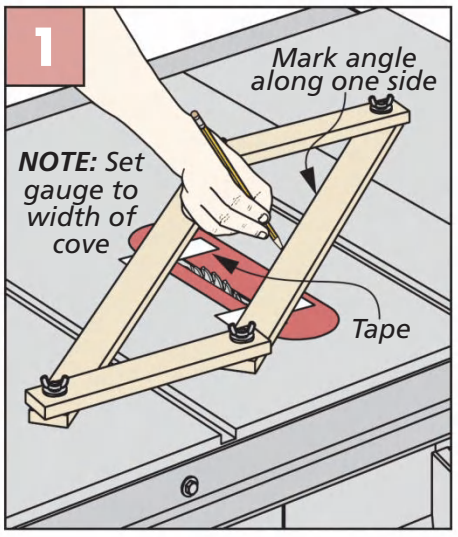

Find the Angle. To find the angle, align the gauge to the tape at both ends of the blade.

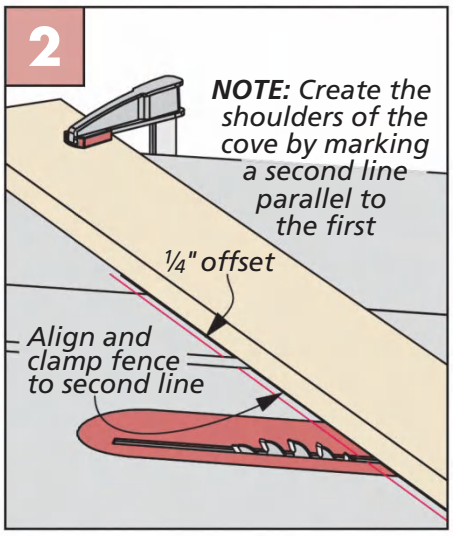

Set the Fence. After making the offset for the shoulder, set the fence and lower the blade.

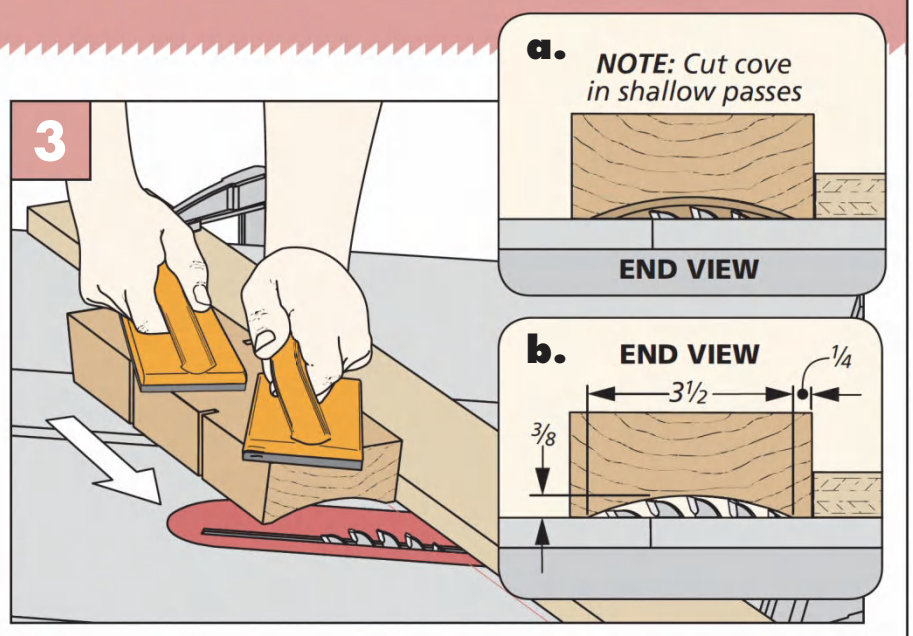

Cut the Cove. Raising the blade a little at a time is the best way to ensure good results. At first, the cove will look uneven. But at the final height it will be centered.

second line, parallel to the first. This accounts for the shoulder that's on each edge of the cove (Figure 3b). Align the fence here and clamp it in place (Figure 2).

CUT THE COVE. Lower the blade so the teeth are only about a 1/16" above the table. Now using push blocks like you see in Figure 3, make a series of light passes over the blade, raising the blade a 1/16" between each pass, until you're close to the final depth. Finish the cove with a pass that's even shallower. To remove any saw marks, sand the cove with a block that matches the profile.

BOTTOM ARC. This last step will seem like a picnic compared to making the cove. The bottom of the holder has a large, gentle arc that runs along its length.

Begin by laying out the curve as shown in detail 'b' on the previous page. Starting the curve ½" in from each end creates feet for the holder to rest on. After cutting the arc at the band saw, sand everything smooth.

FINISHING OPTIONS. Another benefit of this project is how quick and easy the holders are to finish. In the photo below, you see classic maple and traditional cherry with lacquer finishes.

The finish for the white oak holder on the left is a little more involved. It starts with a dark gel stain for a deep tone. When that's dry, it's covered with two coats of lacquer finish. Then, to create a subtle contrast, I applied liming wax to highlight the grain. These creative options reveal that this is clearly a gift that will light up any occasion. W

▲ The only limit to this project is your imagination and how much scrap wood you have in your shop. The type of finish you choose also opens up an infinite number of options for this great gift.

HEIRLOOM Project

Written by: Logan Wittmer; Project Design: Dillon Baker

Welsh Stick Chair

If you've ever wanted to try your hand at building a chair, this handsome Welsh stick chair is the perfect project to get you started on your journey.

▲ The profile of the back rail mirrors the shape of the seat. The rail curve combined with a center bridge piece makes the chair comfortable to sit in for extended periods of time.

▼ The shaped and contoured seat on the chair looks complicated. But a strategic approach and an aggressive cutting disc in an angle grinder make shaping the seat quick and easy.

There are a few areas of woodworking that are categories on their own. Chairmaking is one of those practices. In the past, a woodworker could make a living specializing in building chairs. But the need for simpler everyday chairs, instead of formal seating, drove several styles of chairs built by general furniture makers. Here's one of those styles — a Welsh stick chair.

A STAKED CONSTRUCTION. One of the defining feature of a Welsh stick chair is the simple construction. While fancier types of chairs, such as Windsor chairs, feature a variety of steam bending and turning, the Welsh chair is a utilitarian piece. Its legs are usually faceted instead of turned. The back rail is cut from a segmented blank instead of bent, and the joints are all basic construction — a round tenon fitting into a round mortise. It's quick to make and lasts a long time.

These changes made the chair more economical to build for the average furniture maker. A lathe wasn't required to turn the legs — a handplane created the facets. Instead of turning tenons on a lathe, a reamer and tenon cutter took care of the joinery.

BECOME A CHAIRMAKER. Even though I've talked about the simplification of the building process, that doesn't mean this chair won't present a few challenges. Not to worry however. A few, basic chair-building fundamentals are all you need to get started. Well, that and some stock. So, turn the page to start your very own Welsh stick chair.

Illustrations: Dirk Ver Steeg

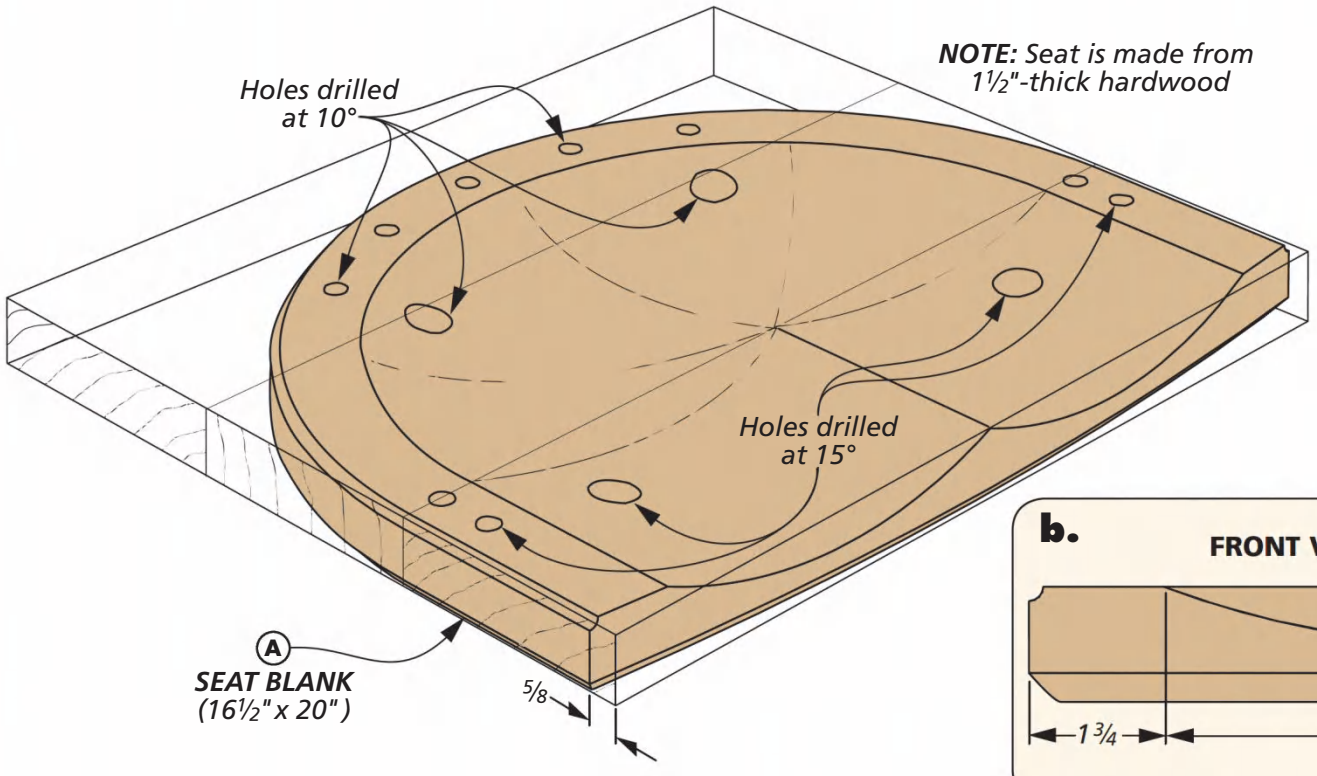

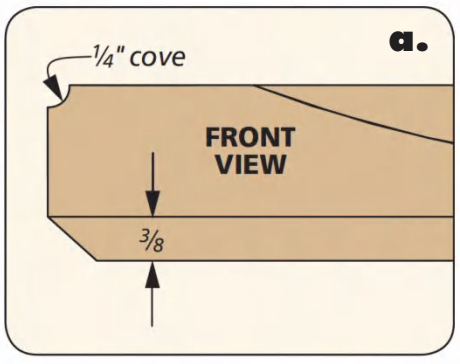

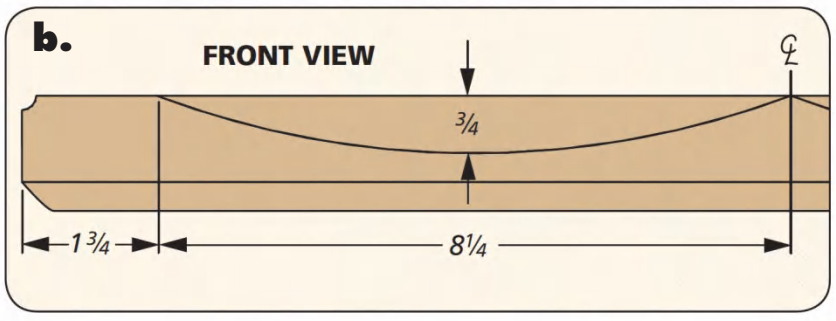

Shape the SEAT PAN

Just like the hub is the center of a wheel, the seat is the center of the chair. It's what supports you as you sit and what everything is attached to. So, following that train of thought, it's the logical place to start. Traditionally, the seat would have been made from a green (wet) piece of stock that has an interlocking grain to resist splitting, such as elm. Here however, I used stable, kiln-dried white oak.

A BLANK FIRST. The first order of business is to prepare your seat blank. Because of the size of blank needed, you'll want to glue up stock to create the blank. I planned to ebonize my chairs, so I wasn't too concerned with grain matching. But, if you're going to use a lighter stain on your chair, select stock that has a close grain and color match.

After the glue is dry, mill the blank to the dimensions above. This is still a little larger than the finished seat, but the idea here is to get the seat blank flat and square so you can do some accurate layout work.

SIGHTLINES. To create the splay of the legs and the angle of the back, you'll need to create angled mortises (holes) through the seat. The challenge here is that each hole is drilled at a slightly different orientation in relation to its neighbor. To help

ANGLED MORTISES

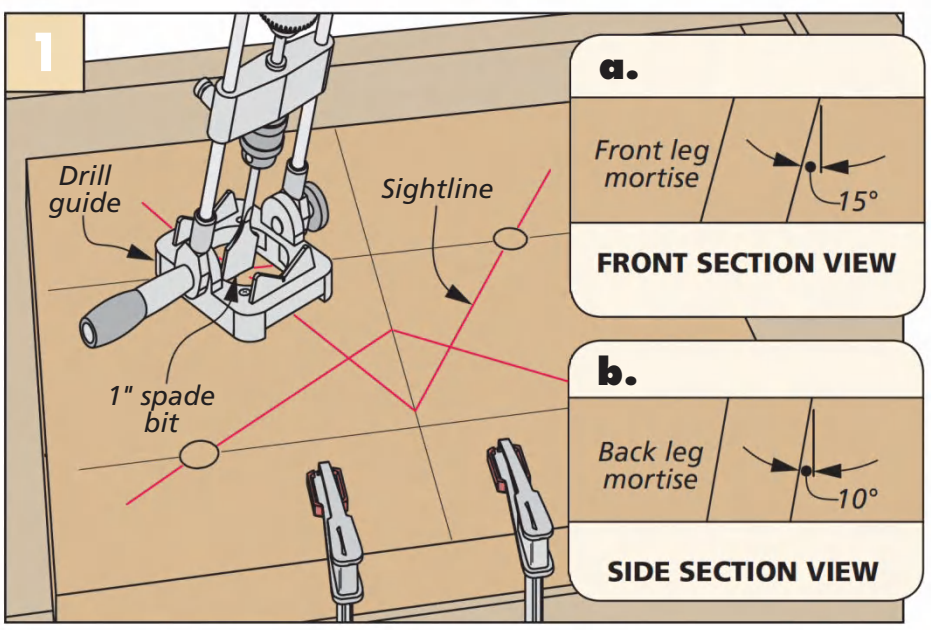

Leg Mortises. With the drill guide set to the appropriate angle, drill the leg mortises. Rotate the drill and guide so that they're in line with the sightlines that are drawn on the seat blank.

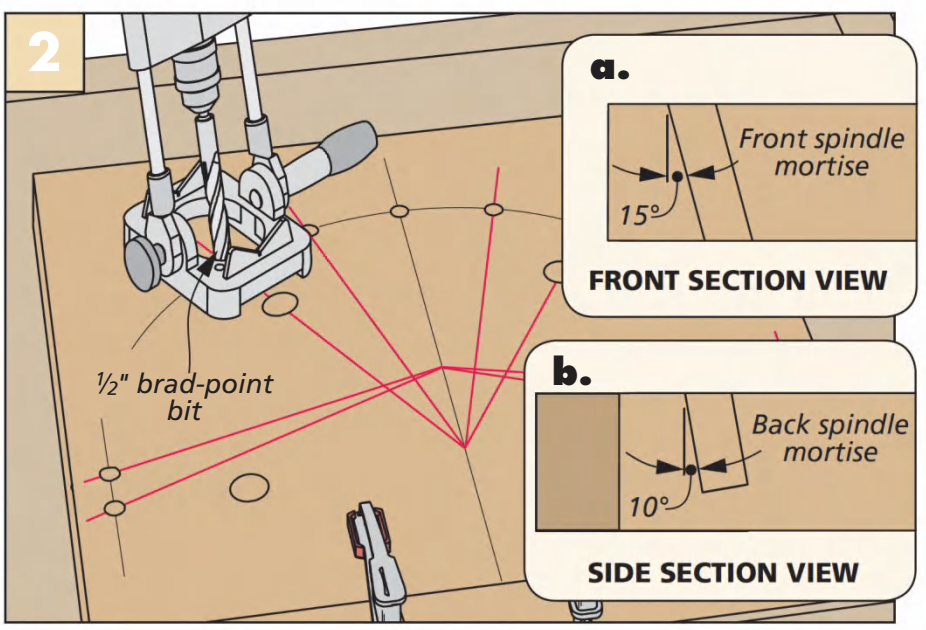

Back Rail Mortises. Switch the angle setting on the drill guide to drill the back rail mortises. Here again, make sure to align the drill and drill guide with the sightline before drilling.

accomplish this task, I used a series of sightlines, as shown in the drawing to the right. Sightlines are used to keep your drill bit aligned at a set position while drilling the mortises. (Alternatively, you can also download a pattern from *Woodsmith.com*.)

To lay out these lines, start off by drawing a centerline down the blank. Then, use a compass to draw the sightlines shown.

ONE MORE ANGLE. There is one more angle that you need to consider when making the mortises and that is the angle of the bit as it drills through the seat. Instead of drilling straight through the seat (at 90°), each mortise is drilled at a slight angle. To keep these accurate, I used a drill guide to hold the drill at the correct angle.

There are two different angles for the mortises. The back legs and spindles are drilled at 10°. The front legs and spindles are drilled at 15°. Once you have the angle of the drilling guide set, follow the box on the previous page to drill the mortises.

SHAPE THE SEAT. With the mortises drilled, you can focus on making the seat comfortable. To scoop out the seat, I used a power carving disc (refer to Sources on page 65) in my angle grinder. These remove material quickly, and the surface can be smoothed out using a flap sanding disc.

To help gauge the progress for shaping the seat, I drilled a series of depth holes. These are stopped slightly shallower than the deepest part of the seat. Once you've ground past the holes, you are close to the final shape and can switch over to sanding. You can see these shaping steps in the box below.

ROUT THE EDGE. The final details to take care of on the seat are to cut it to shape at the band saw and then profile the edges. To do this, head over to the router table. The top edge gets a cove and the bottom gets a chamfer, as illustrated in detail 'a.'

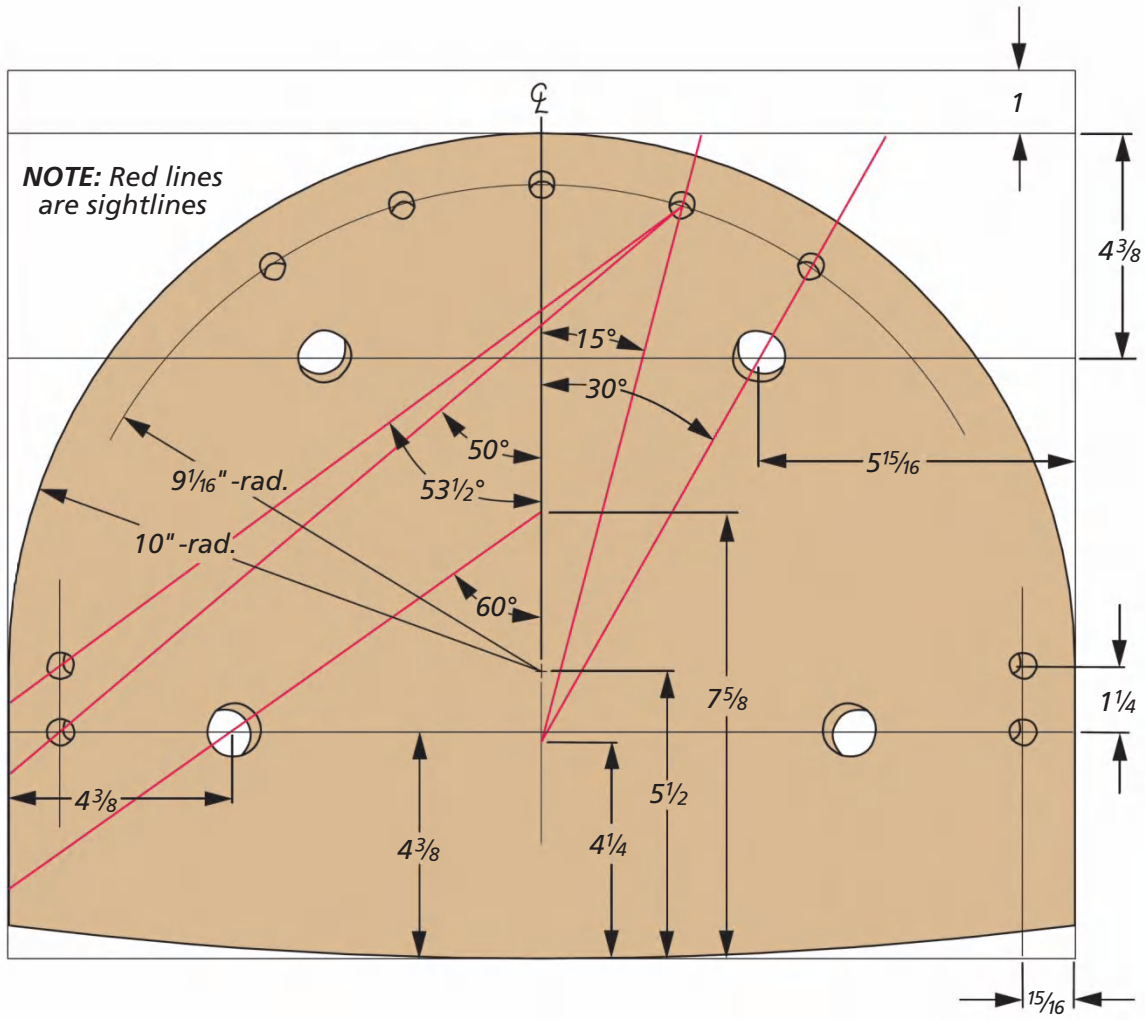

▲ A power carving disc makes quick work of the seat.

POWER CARVING

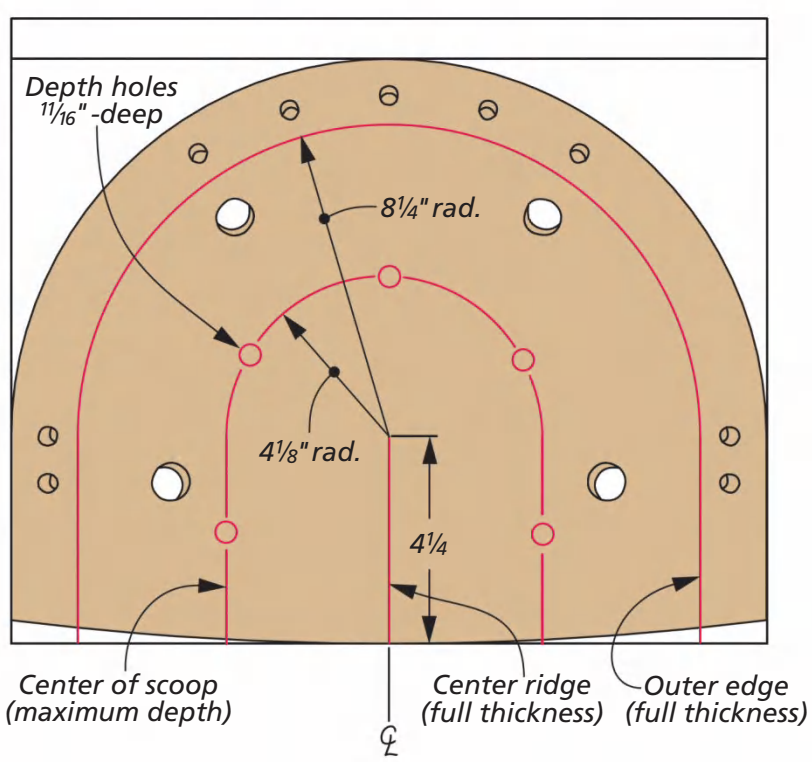

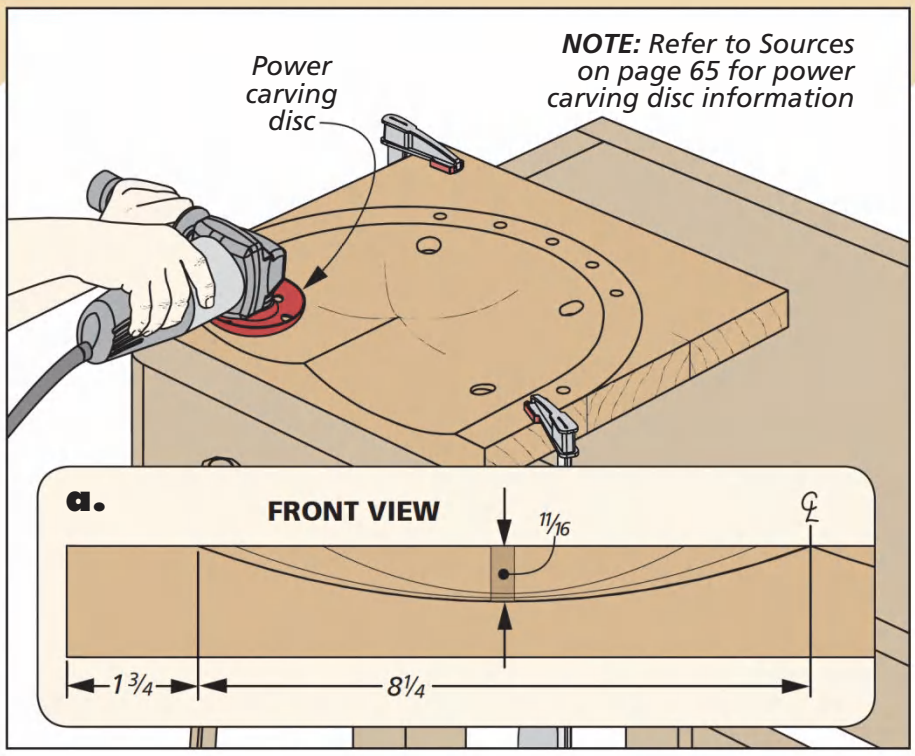

Shape The Seat. Drill the depth guide holes. Then, use a carving disc in an angle grinder to shape the seat, stopping just as the holes disappear. A sanding disc is used for final shaping.

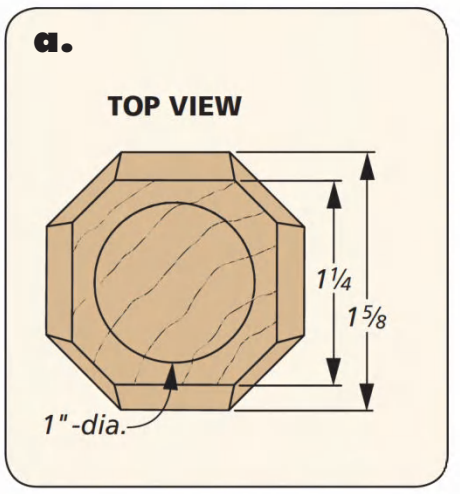

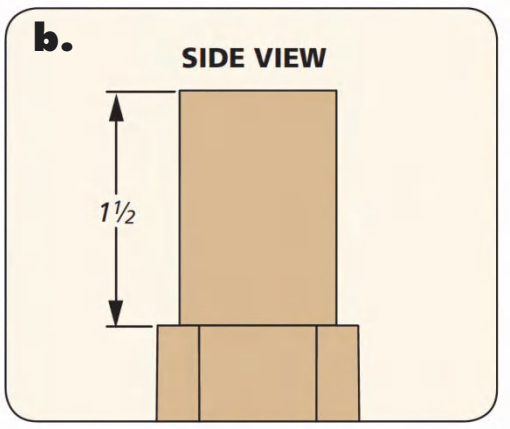

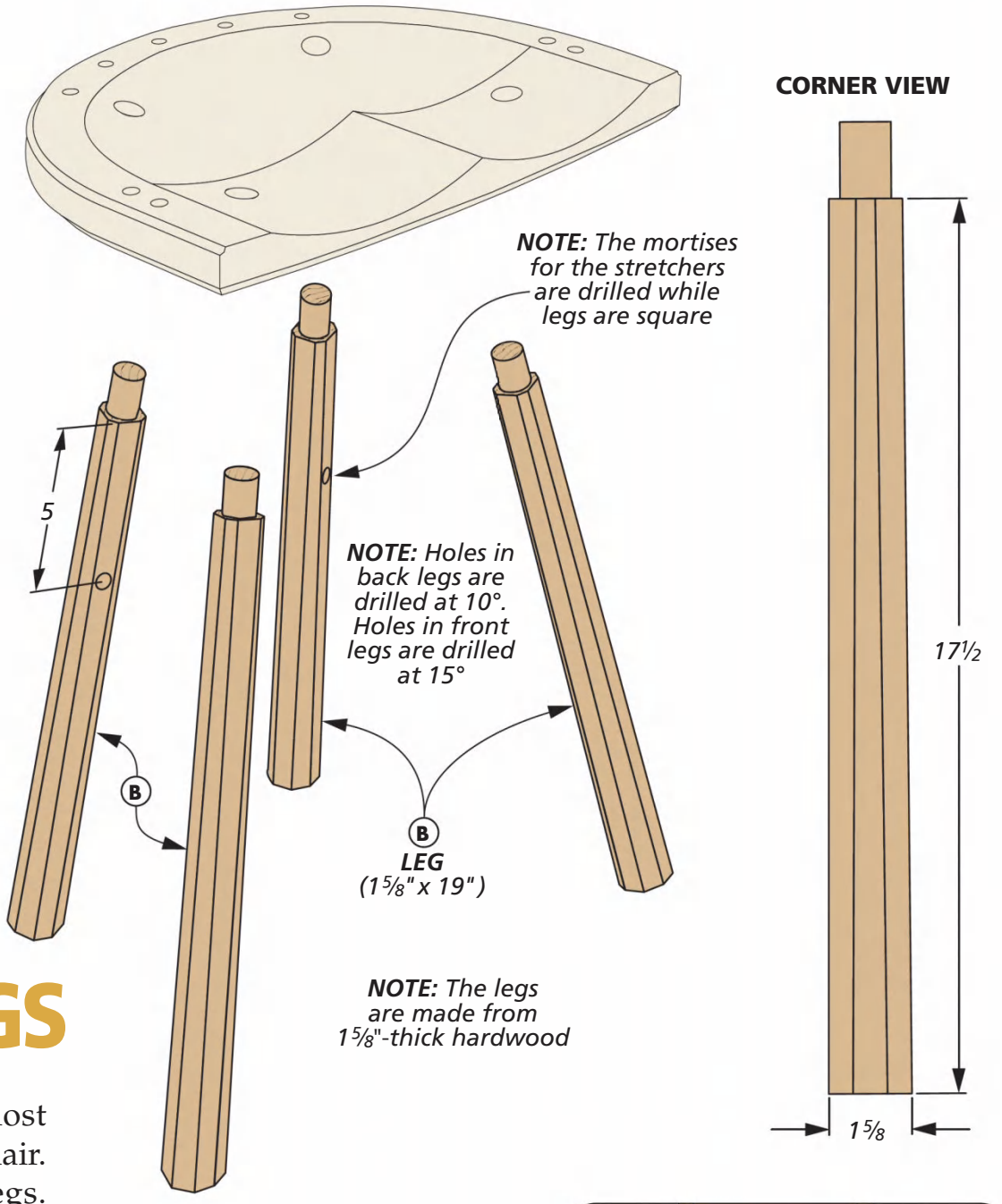

Sturdy, tapered LEGS

Creating the seat is the most challenging aspect of the chair. Up next is making the legs. They're octagonal and are wider at the bottom, tapering toward the tenon.

TENONS FIRST. As you can see in the drawing above, round tenons fit into the seat mortises. So the first thing to do, after cutting and milling the stock into square blanks, is to create the tenons.

If you have a lathe, creating these tenons is straightforward. Just turn the ends round, checking the fit often — you're looking for a snug fit.

TURNING AT THE SAW. If you don't have a lathe, don't despair. You can turn the tenons on your table saw or router table. It's not a difficult process — look at the box on the top of the next page. To help guide the workpiece, you'll first need to create a jig.

The jig consists of a pair of braces held to a base and back. The braces have holes sized to hold the leg blanks. The jig is then attached to the miter gauge.

TURNING THE TENONS. To use the jig, position the rip fence to establish the shoulder of the tenon.

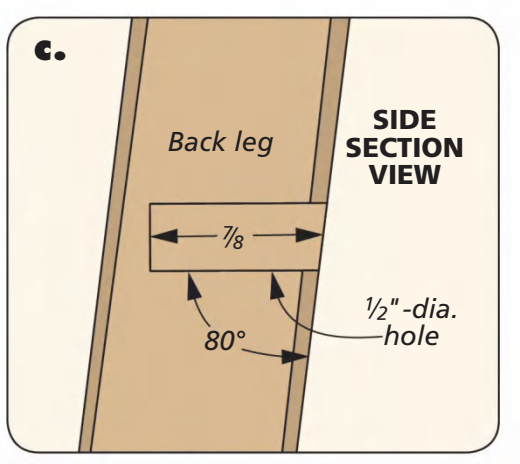

Then raise a dado blade high enough to cut the tenon. Turn the saw on and push the jig and leg into the blade. Once the leg reaches the high point of the dado blade, rotate the leg blank to "turn" the tenon round and check the fit. Then, it's just a matter of repeating this process, making a couple of passes to cut the entire length of the tenon.

STRETCHER HOLES. With the tenons cut, it's time to tackle the hole in each leg that will accept the stretchers you'll make later.

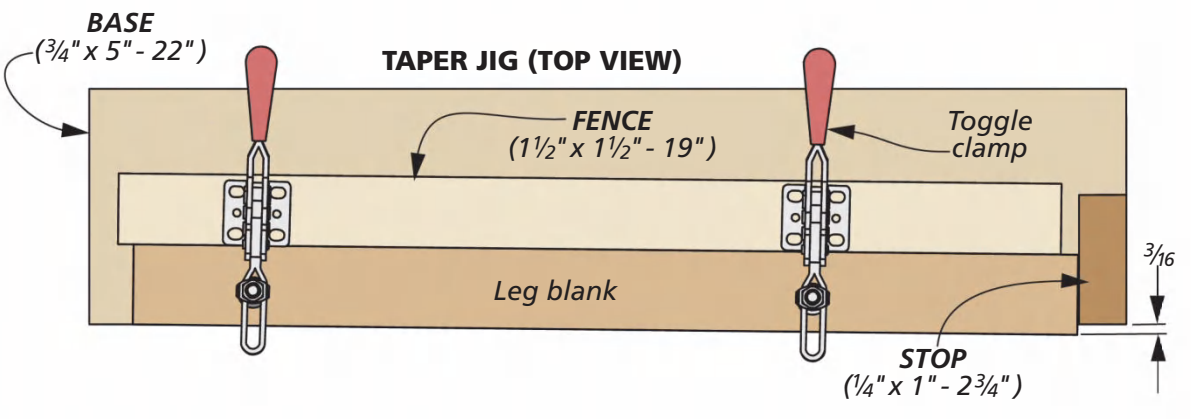

CUTTING ROUND TENONS

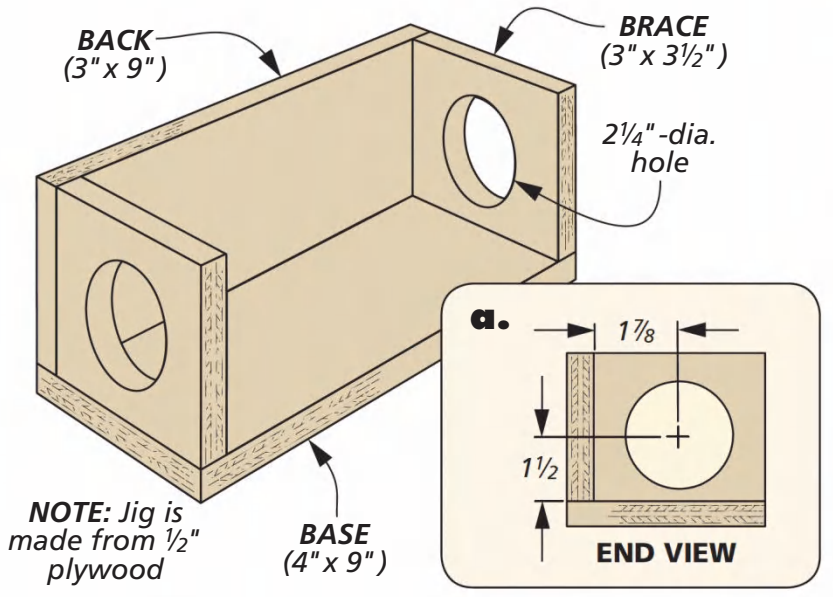

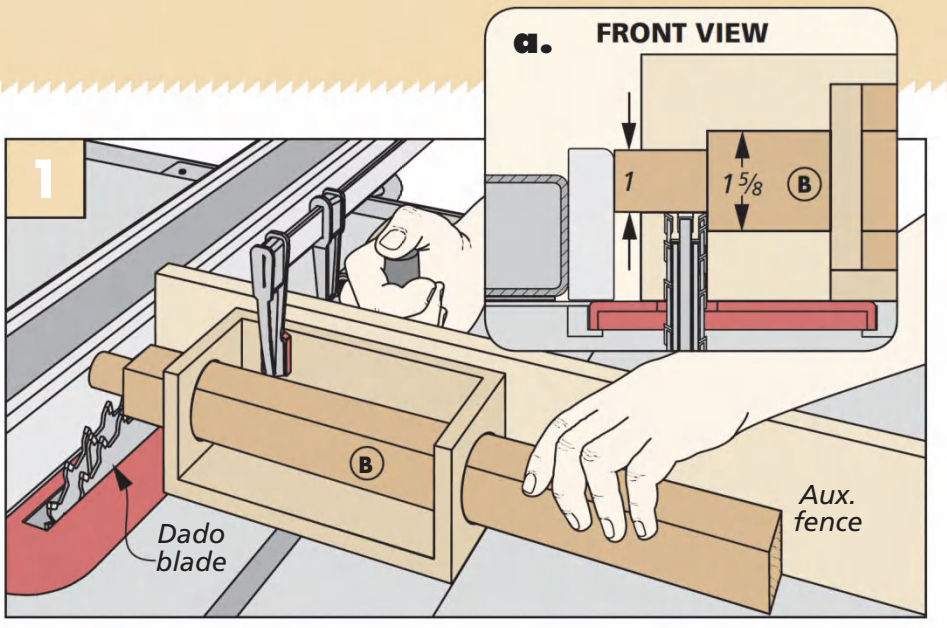

Table Saw Tenon. Ease the corners of the leg, if needed, to fit into the holes in the jig. Push the leg forward into the running blade and rotate the leg to form the tenon.

Because of the splay of the legs, these holes also need to be drilled at an angle. The front leg hole is drilled at 15° and the hole in the back leg is drilled at 10° (detail 'c'). You can't use the drill guide here, but it's easy enough to tilt the drill press table to the correct angle.

OCTAGON TAPER. Now you're ready to tackle the tapered octagons of each leg. You can see these steps in the box below.

The first step is to form a tapered leg by using a taper jig at the table saw (Figure 1 and bottom drawing on previous page). Cut each face, rotating the blank each time. You'll want to add a spacer between the tapered face and the jig fence for your final two cuts (Figure 1b).

Now you'll create the tapered facets that make the leg an octagon. The simplest solution here is to run the tapered leg through the table saw with the blade tilted 45°, as seen in Figure 2. However, you'll need to stick the leg down to a carrier board using double-sided tape. This allows the tapered leg to run parallel to the fence and cut the appropriate sized taper. Just pull the leg off the carrier board and rotate it to bevel each corner.

DRY ASSEMBLY. Now you can fit the legs into the chair, making sure the stretcher holes line up. While they're in place, mark the tenons for the wedge that will get glued in place later. Align all the kerfs in the same direction (mine run front to back). Next is cutting the kerf and assembling the legs.

TAPERED OCTAGON

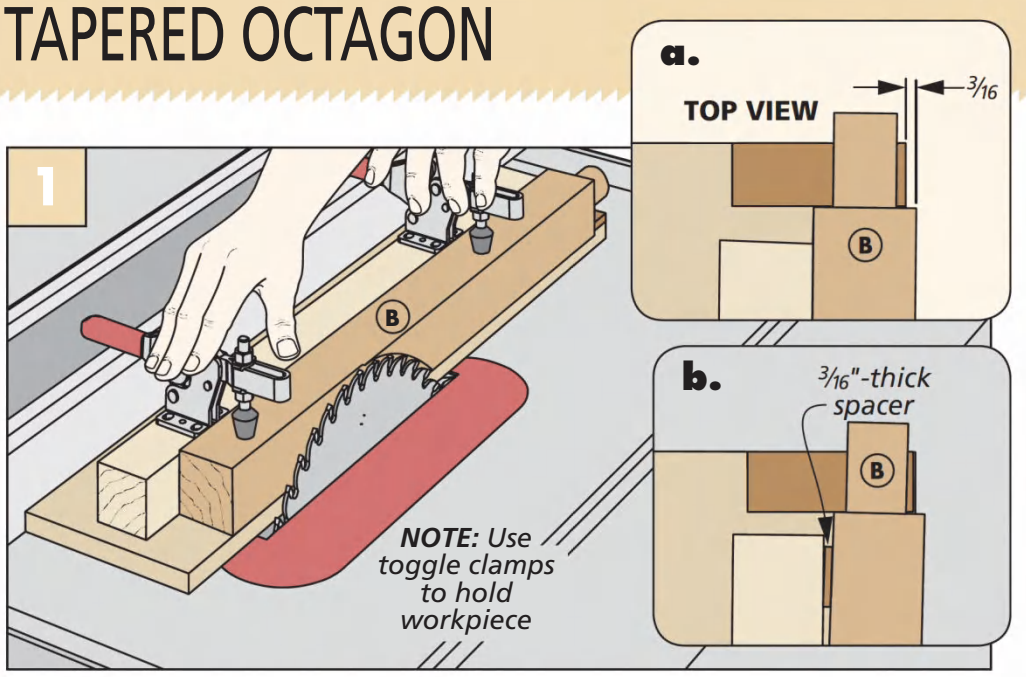

Four Sided Taper. Use a taper jig to cut a taper on the four sides of the leg blanks. Use a thin spacer between the already tapered faces and the fence to cut the last faces.

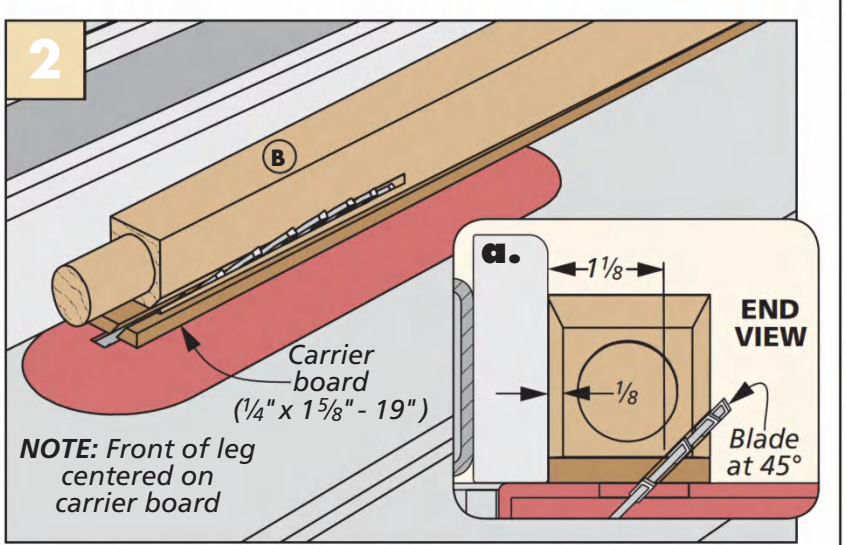

Bevel The Corners. Attach the leg to a carrier board with double-sided tape. Then, bevel the corners of the legs by running the carrier board against the fence.

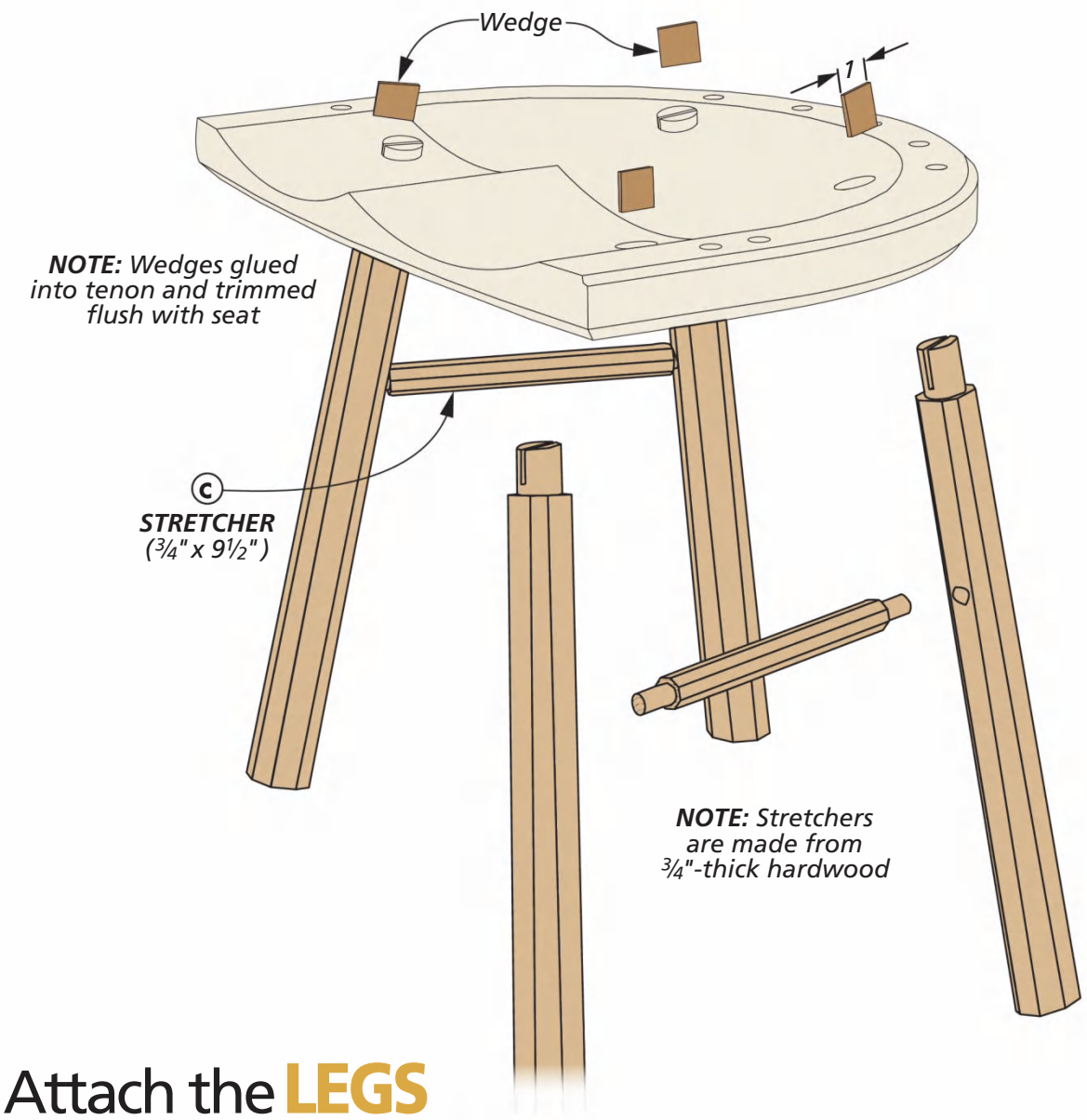

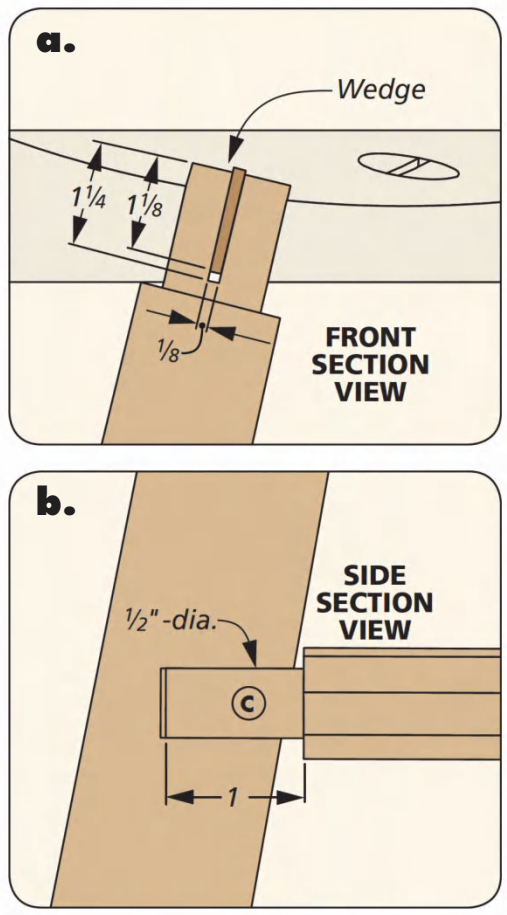

Attach the LEGS

You're almost ready to assemble the legs to the seat and see some progress being made. But first, there are a few details to take care of on the legs.

KERF SLOT. Remove the legs from the stool and head over to the band saw to cut a slot in the tenons for the wedge. You're aiming for a narrow slot for the wedge, as illustrated in the box in the lower right corner of the next page.

To make the wedges, I cut some scrap hardwood and sanded it to thickness. But before you can glue the legs in place, you'll need to make a pair of stretchers.

OCTAGONS AGAIN. The stretchers (and later, the spindles) are similar to the legs, they're just not tapered. Start off with square blanks. Then, use a smaller version of the tenon jig to form the tenons on both ends of the stretchers (detail 'b').

Unlike the legs, the stretchers do not have any taper to their octagonal shape. This means that they're pretty straightforward. You can simply cut them to shape at the table saw by tilting the blade 45°, as shown in Figure 1 at left.

GLUE & WIGGLE. With the stretchers in hand, you can grab the legs and seat and get some assembly done. Because of the different angles, you'll have to assemble the chair in stages. To simplify things, I glued up one set of legs at a time. Also, it helps to select a glue that has a long open time, such as hide glue or an extended cure epoxy.

Begin by applying glue to the leg tenons and starting each into the mortise. Then, glue the stretcher into place between each pair of legs. You might have to back one of the legs out of the mortise to get the stretcher in place. But a little bit of wiggling,

SHAPING & ASSEMBLY

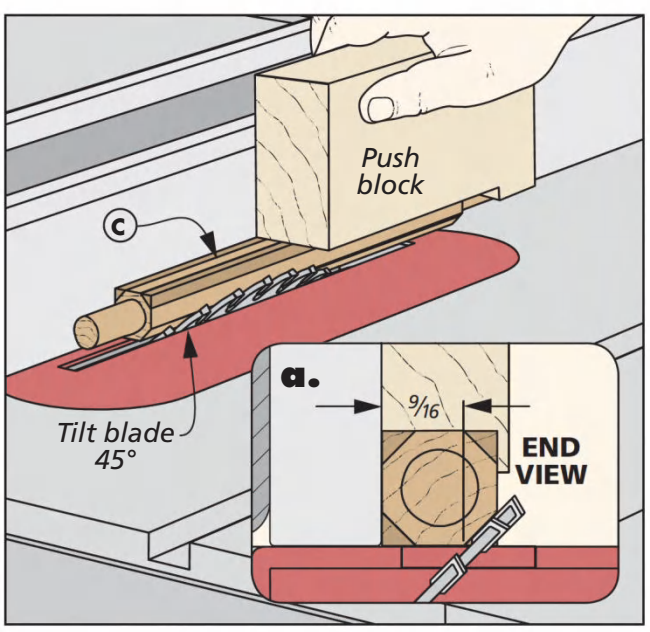

Octagons. After cutting the tenons on the stretchers, tilt the table saw blade to form the octagon-shaped stretchers.

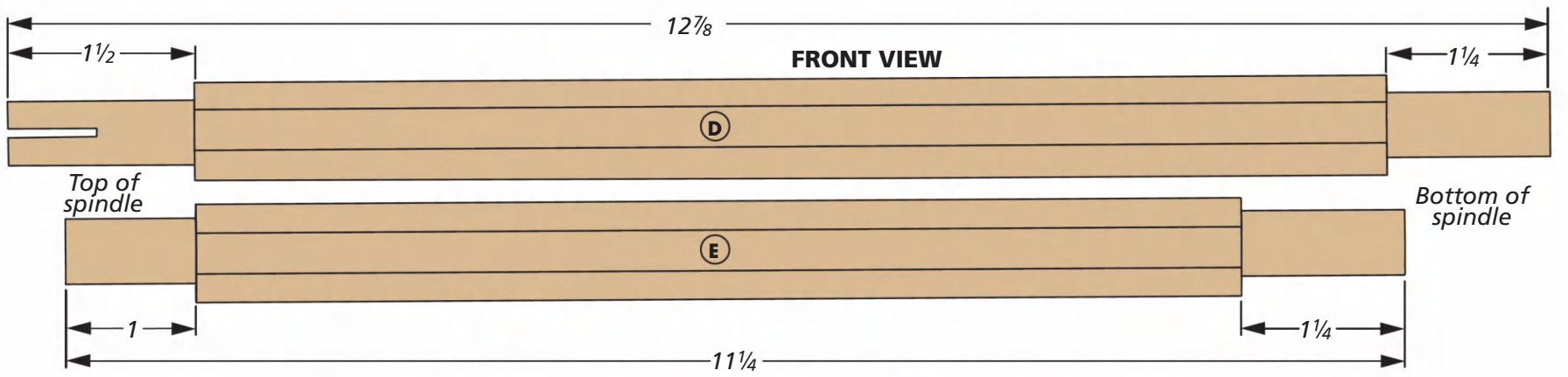

pulling, and persuasion will get it to seat. Once the stretcher is in, you can drive the legs home in the mortises. The second set of legs follows suit.

LITTLE WEDGES. After the legs are all in place, turn the chair upright. Apply a little glue to the wedges and drive them in place (main drawing, previous page). Once the glue has had time to dry, trim the tenons and sand them flush.

BACK SPINDLES

A chair without a back is nothing more than a stool. So, to make the chair more comfortable, you'll add a crown of spindles around the seat that will connect to a back rail (you'll make that later). These include five back spindles and four, longer front spindles. You can see these in the main drawing at right.

LONGER FRONTS. The spindles are nearly the same as the stretchers, but different lengths (see drawing above). Cut the tenons on the end of each at the table saw again before turning them into octagons. Note that the tenons on each end are different lengths.

As I mentioned before, the front four spindles are slightly longer than the back spindles. They also have a kerf cut in the top tenon for a wedge that will be installed after the back rail (see the box at right).

Once you have the spindles done, you can put them in place on the seat to check the fit and angle (and honestly, just to see how they look). But don't glue them yet. Just like the legs needed to be walked into place, the front and back spindles will need some finessing and gentle taps to get them into the back rail. Speaking of the back rail, you'll be making that next.

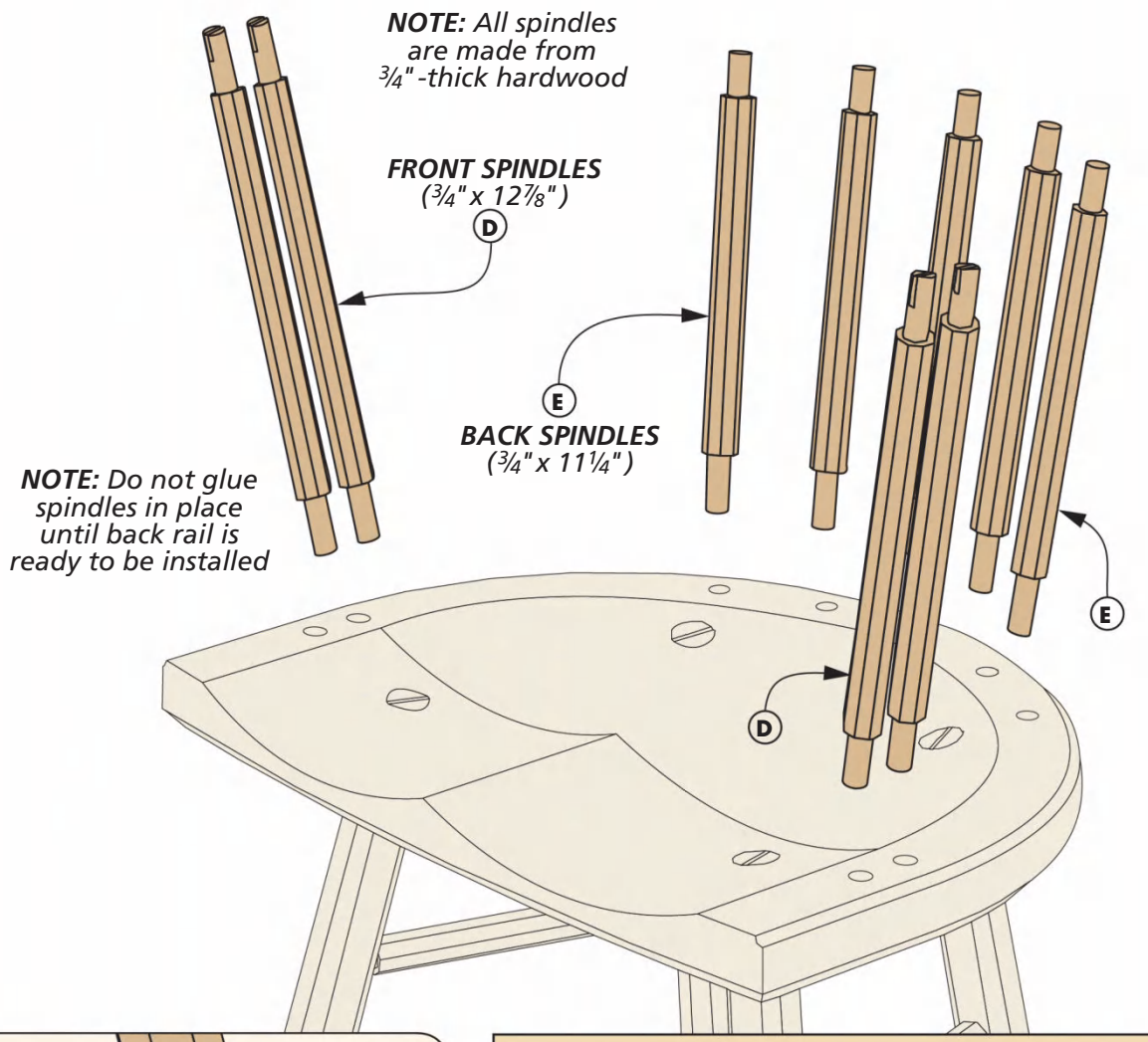

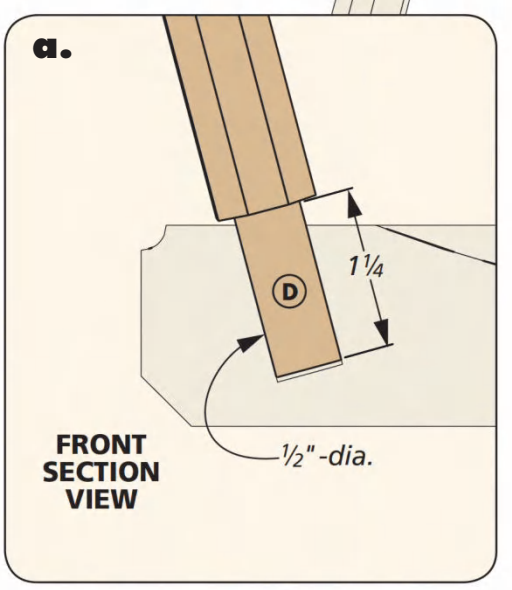

WEDGE SLOTS

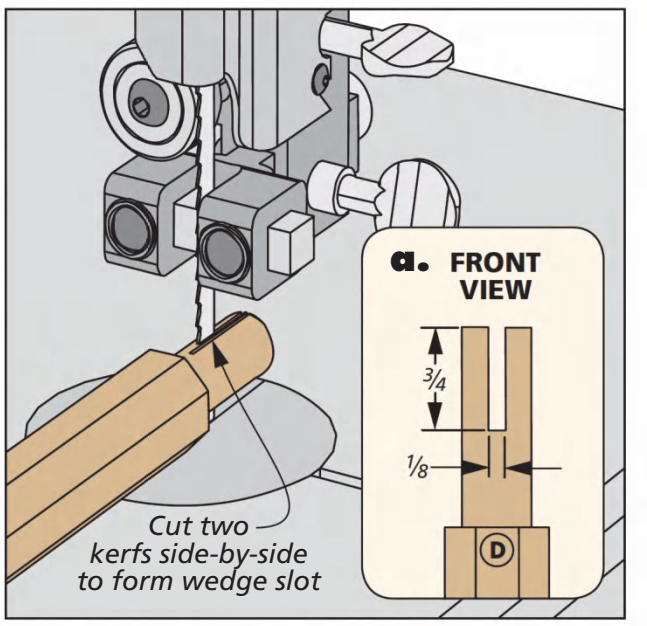

Kerf the Tenon. At the band saw, cut kerfs in the tenons of the legs and the upper tenon of the front spindles.

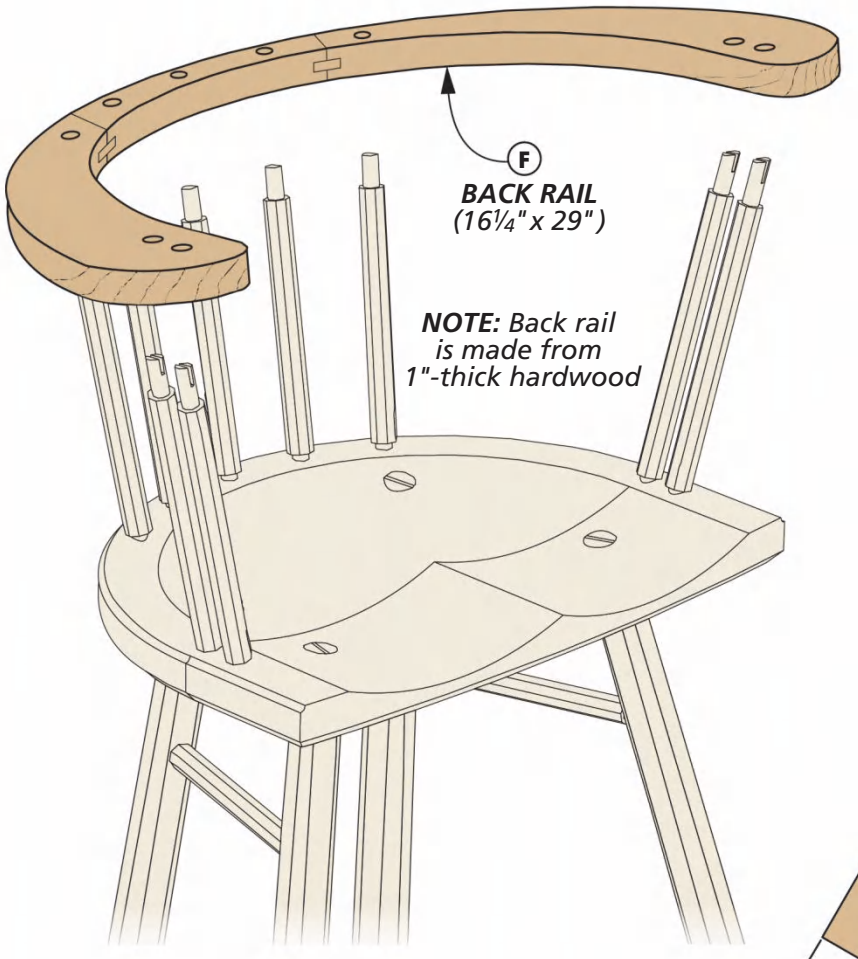

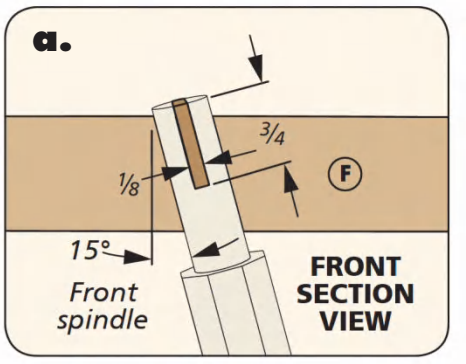

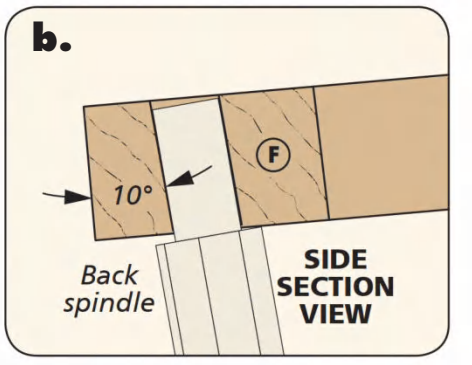

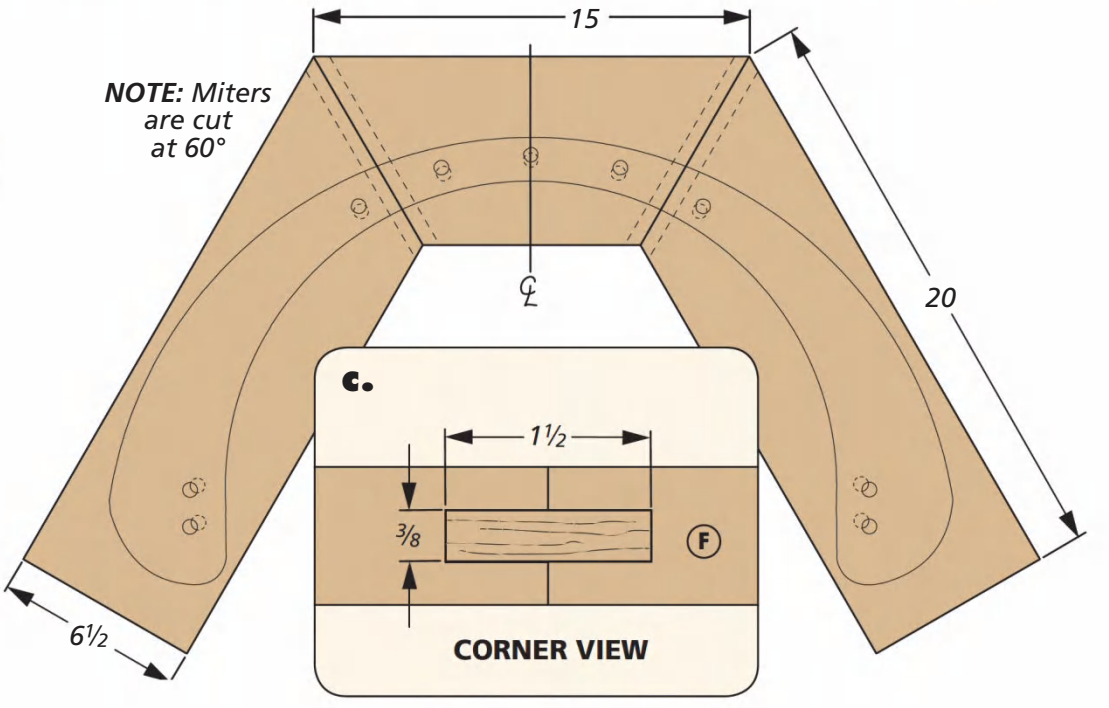

Add a BACK RAIL

Historically, Welsh stick chairs had a low back rail. And I kept with this tradition. The curved rail is cut out of a glued-up blank, and then mortises are drilled for the spindles before cutting it to final shape.

U-SHAPED BLANK. When you look at the back rest above, you can see that you'll need to glue up a U-shaped blank. The blank is created using splined miters. Start off by mitering the ends of the stock. Use a dado blade to cut the spline slots, as shown in Figure 1. Then, cut splines from hardwood stock (Figure 2) and glue the blank up. Use a couple of blocks screwed in the waste area as locations for tightening the clamps.

CREATING THE BACK RAIL

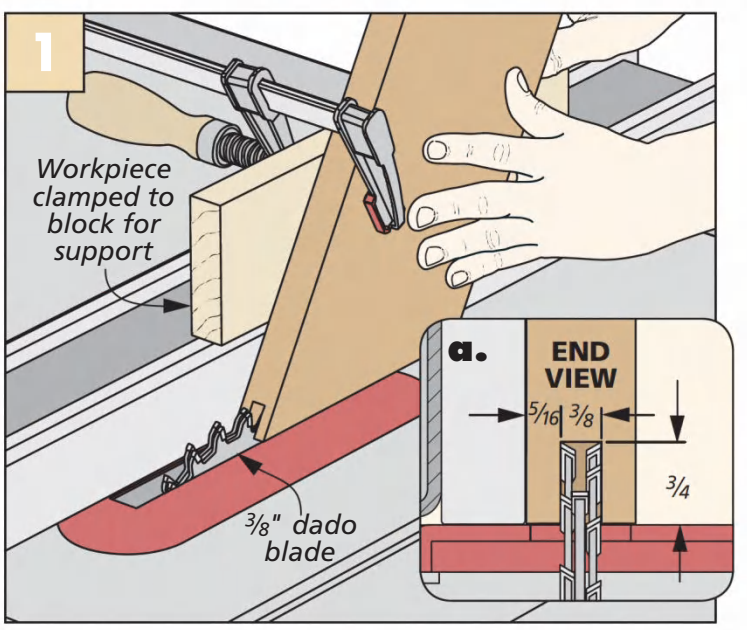

Spline Groove. After mitering the ends of the back rail blank, use a dado blade at the table saw to cut a groove for the hardwood spline.

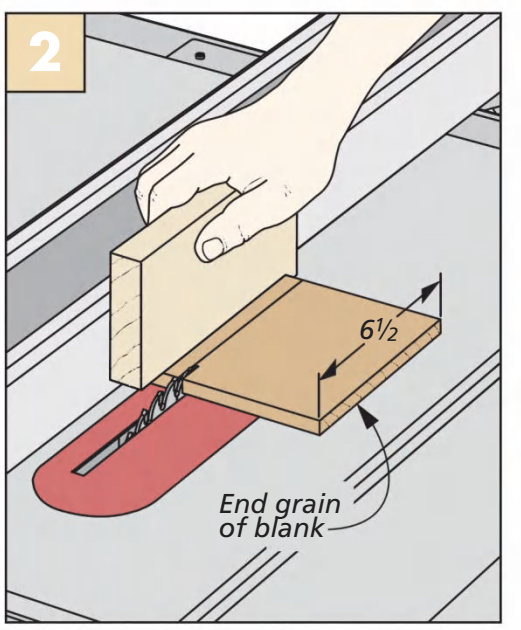

Create Spline. Crosscut stock for splines, making sure the grain is running in the short direction.

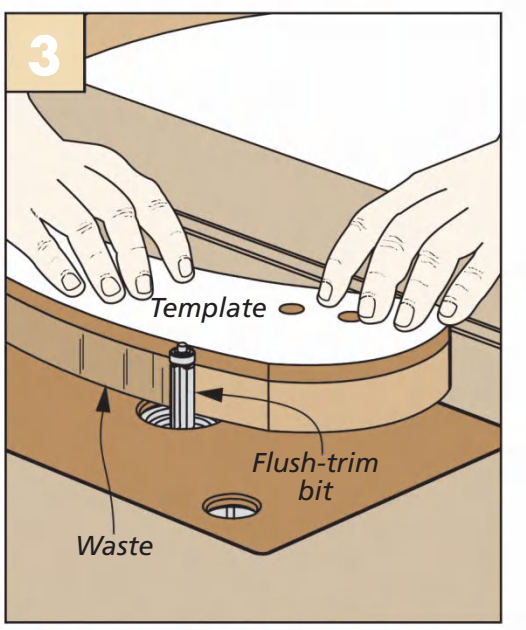

Smooth the Curve. Use a flush-trim bit at the router table to smooth out the back rail shape.

MORE SIGHTLINES

Once the glue is dry, you have a decision to make on how to lay out the holes for the spindles. The simplest is to go to *Woodsmith.com* and download the pattern. The pattern shows the shape and hole positions for all of the spindle locations. In addition, it already has sightlines drawn on it for aligning the holes.

The second option is to lay out the shape using sightlines and the dimensions shown at right. You can place the back rail blank on a worksurface (such as a piece of plywood) and lay out the sightlines to position all of the mortises. (I just clamped mine to my bench and drew the sightlines on the worksurface.)

ANGLED MORTISES. Regardless of how you decide to lay out the holes, once they're on the blank, you can drill them. Use the drill guide as before, and here again, there are two different angles. The back holes are drilled at 10° and the front holes are at 15°. If necessary, you can butt a scrap of stock against the back rail to widen the base and help support the drill guide as you drill the holes. Like before, make sure to keep the drill bit inline with the sightline.

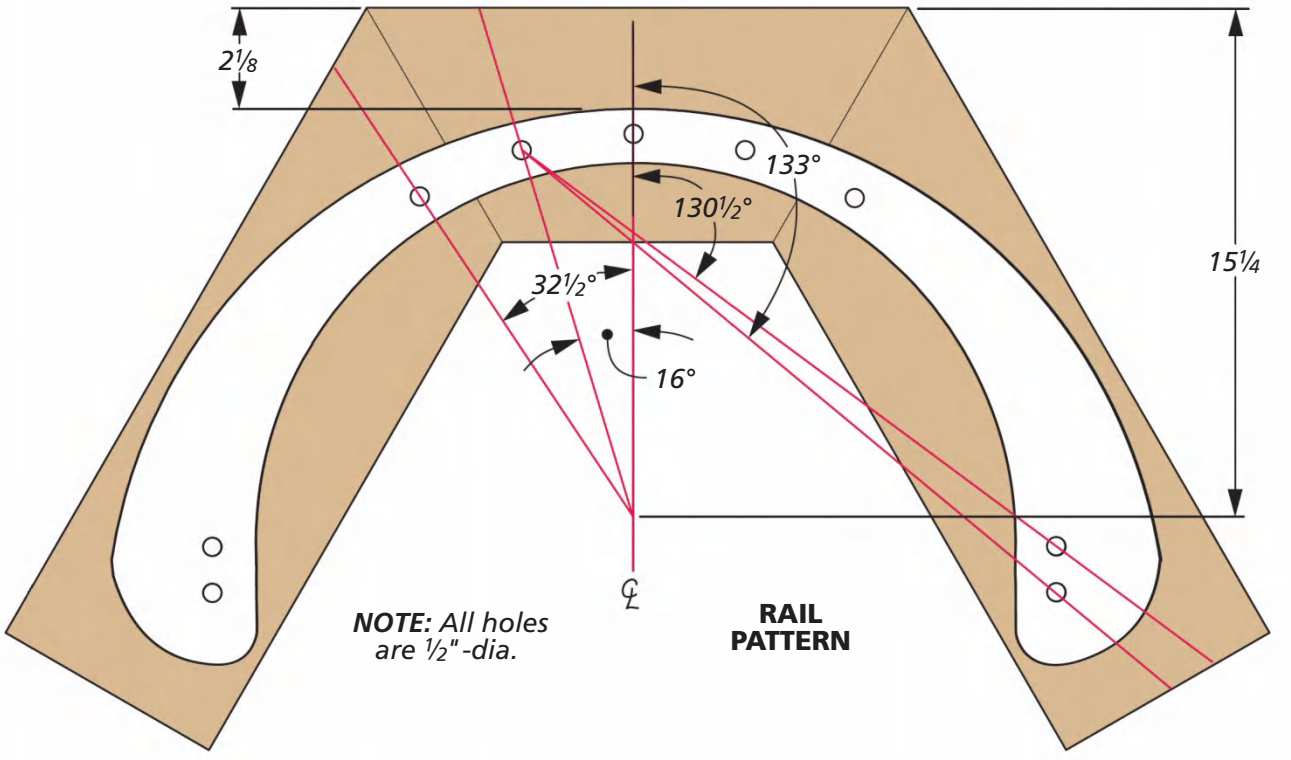

CUT TO SHAPE. After a little time spent drilling, you can head over to the band saw and cut the back rail to shape. Cut close to the line, then create a template to flush trim the shape, as shown in Figure 3.

WORK IT AROUND. Now, you're ready to glue the back rail to the rest of the chair. Just like the leg assembly, there's some finessing here to get everything to line up and come together. So make sure you use a glue with a long open-time.

The first thing to do is to check the fit of the back rail. If you find some of the spindles are hard to get into the mortises, you can use a disc sander to put a small chamfer on the ends of the tenons. The chamfer helps keep the sharp corners from catching as you work the tenons into place.

Once you're confident you can get the back rail over the spindles, you can remove it and start applying glue. Start by gluing the spindles into place on the chair seat. Pay attention to the front spindles, keeping the spline kerfs aligned in the same direction.

Now, you'll want to start on one side of the back rest. Glue and seat the left front spindles in place. Just barely get the tenons started into the mortises. Work your way around the back rest while alternating between pushing the back rest down a little on the seated spindles and getting the next spindle started. Don't be afraid to use a little persuasion (a large mallet) to get the spindles to seat fully into the mortises.

Once you have the spindles all in place, apply a pair of clamps across the back rest and seat while the glue dries. Now, it's time to take care of one final detail — a small bridge piece for the back rail.

ASSEMBLY

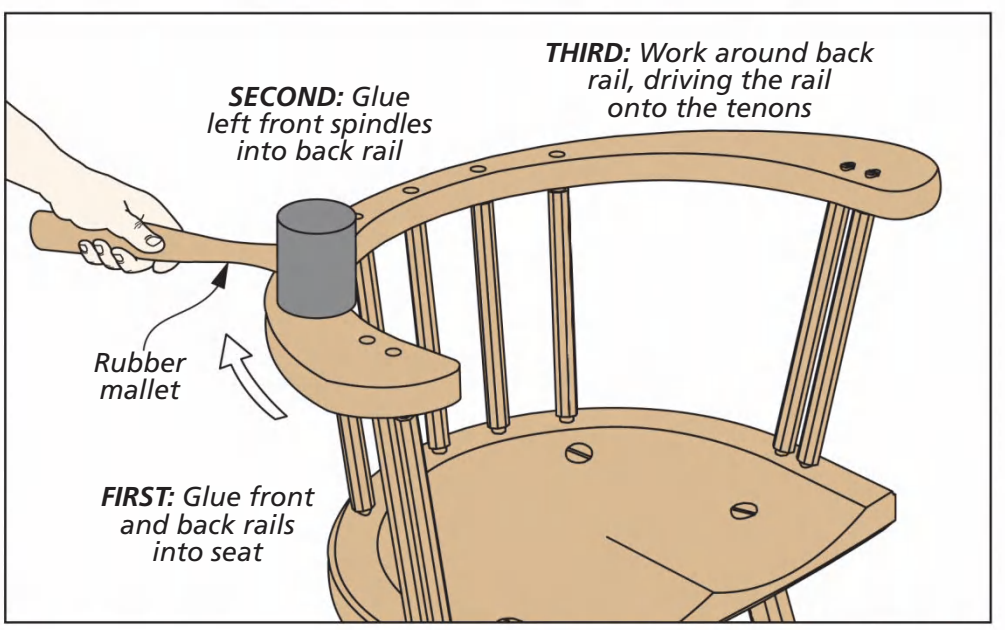

Easy Does It. Working the back rail into place requires starting at one set of front spindles. Slowly work the tenons into the mortises and work your way around the rail, adding glue as you go.

Finish the CHAIR

The bridge of the backrest adds a little additional back support by beefing up the area around the lower back. Once it's added, we'll trim the legs to level the chair and add a finish.

BRIDGE. The bridge for the back rail is probably the simplest part of this chair. It's a piece of oak that's cut to match the profile of the back. The shape is easy to cut out at the band saw. Cut the scooped ends first (Figure 1) before sawing out the curved shape. When cutting the curve, leave a little extra meat that you'll trim flush after assembly.

ATTACH THE BRIDGE. Once the bridge is cut to shape, it's ready to install. Glue it in place, taking care that it doesn't slip while applying clamps. After the glue is dry, you can use a router to trim the bridge flush with the back rail. The setup I used to do this is shown in Figure 2 below. Then, a little bit of hand sanding and easing the top edge finishes it out.

LEVEL THE LEGS. Aside from finish, you have one final decision to make. And that's if you want your chair level or not. You could cut the legs so that the seat of the chair is parallel with the floor. However, I like my chairs to lean back ever-so-slightly. So, I introduced a slight back-tilt to my chair.

To level the legs, start by setting the chair on a flat, level surface. Then, place a bubble level across the seat (keep the level on the flat, outer edge and the ridge). If you want the seat level with the floor, add wedges under each leg until the bubble indicates the seat is level. For mine, I left the back of the seat just a hair low (about 5°).

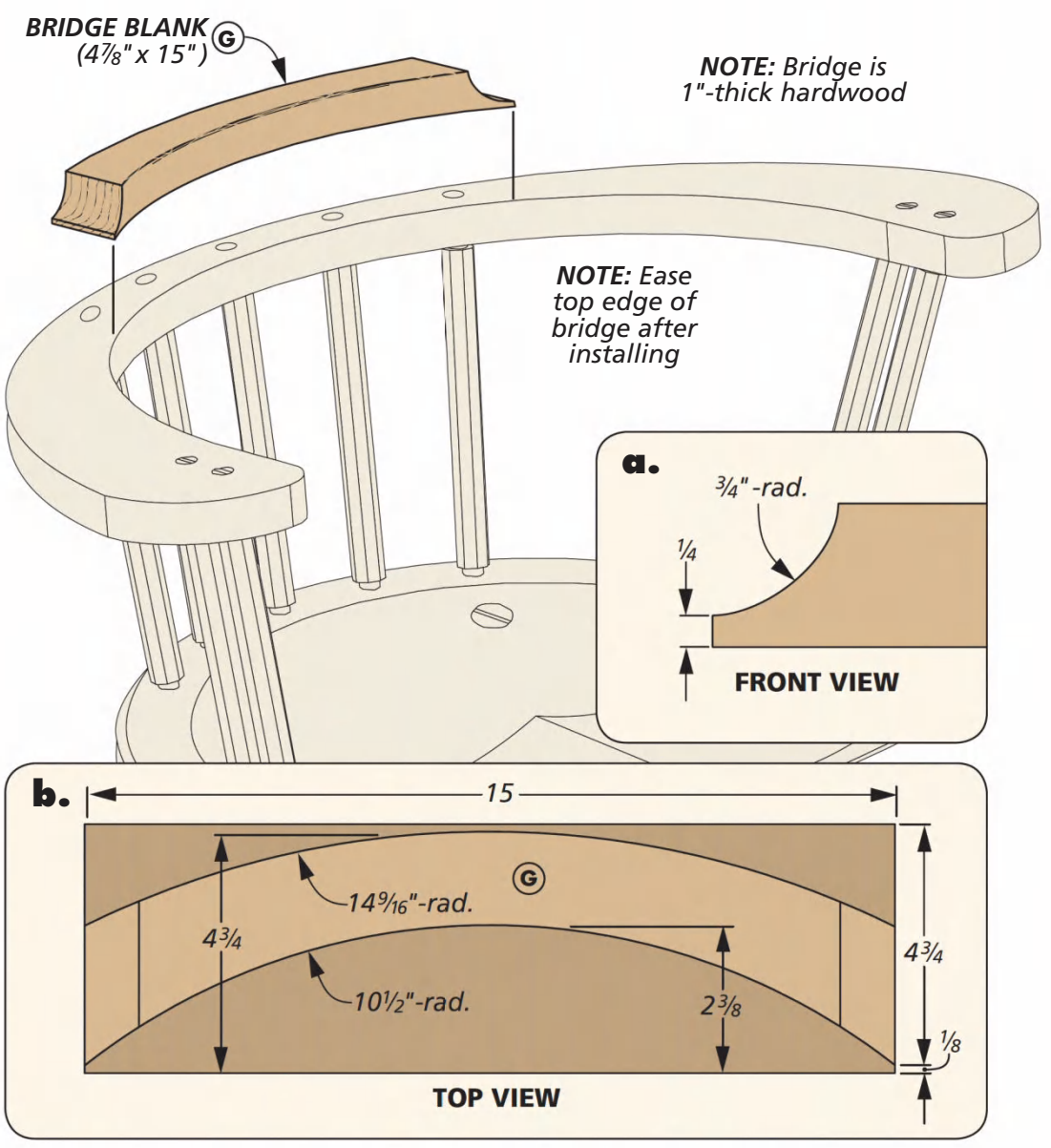

SHAPE THE BRIDGE

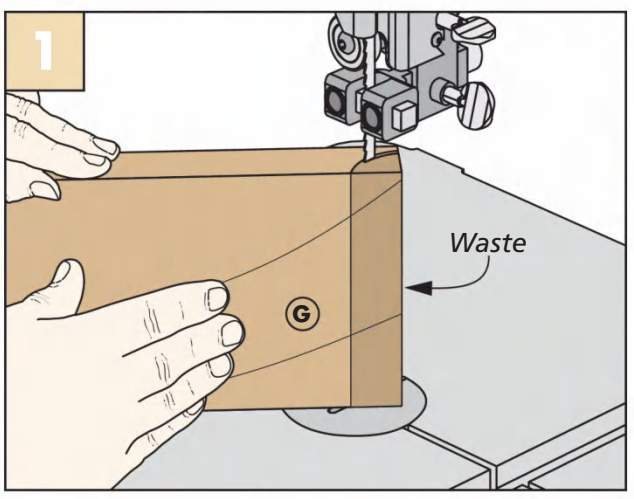

Scooped Ends. Cut the curve on each end of the bridge at the band saw.

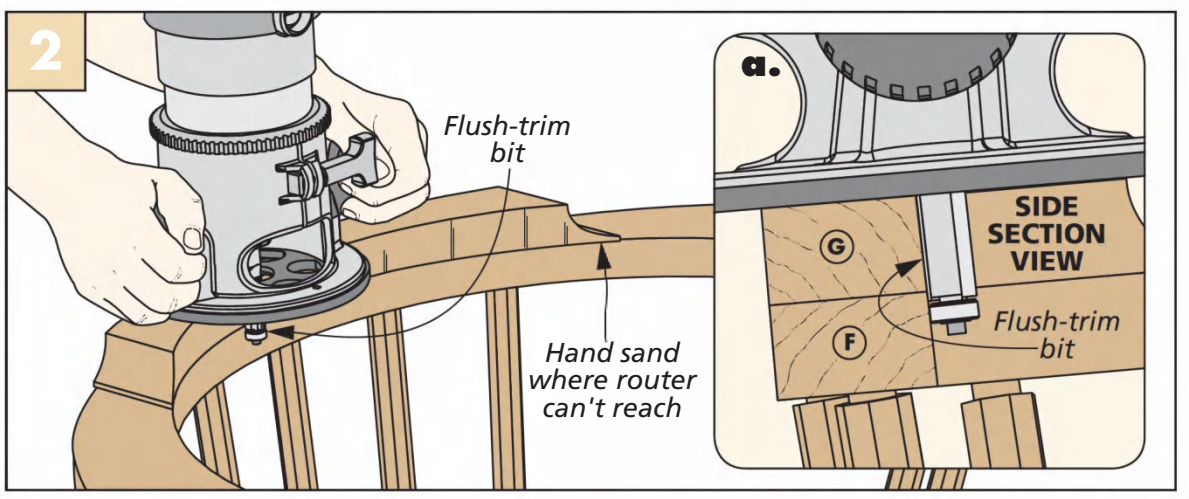

Final Shaping. After gluing the bridge onto the back rail, use a flush-trim bit in a hand-held router to trim the bridge flush to the back rail.

LEVELING OUT

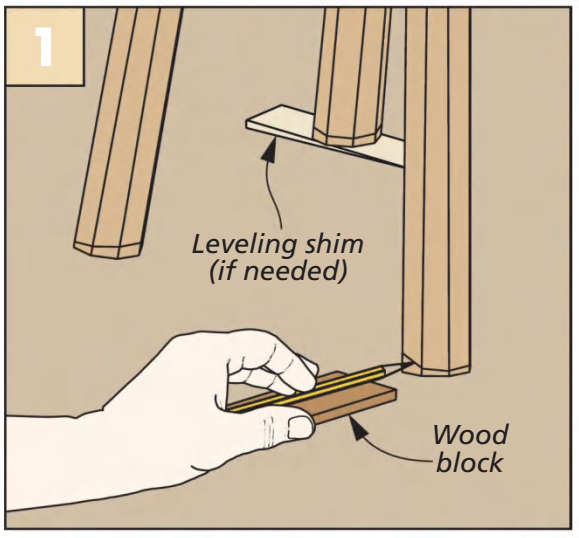

Mark Feet. After leveling the seat of the chair, mark around each foot using a pencil on a scrap block of wood.

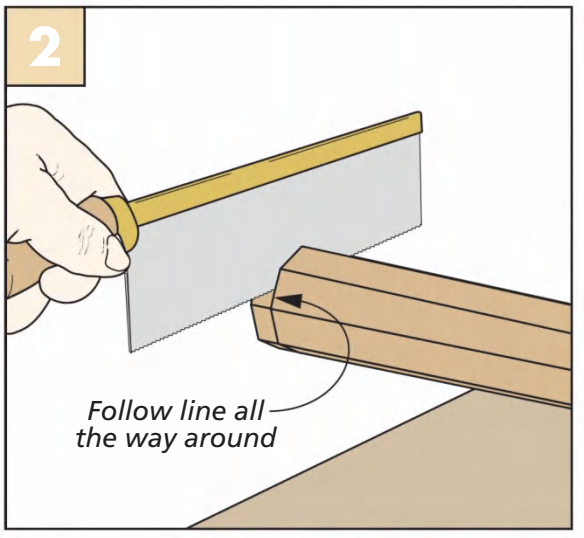

Cut Feet. Use a hand saw to trim each leg to the pencil line. Reference the line around the entire foot while cutting.

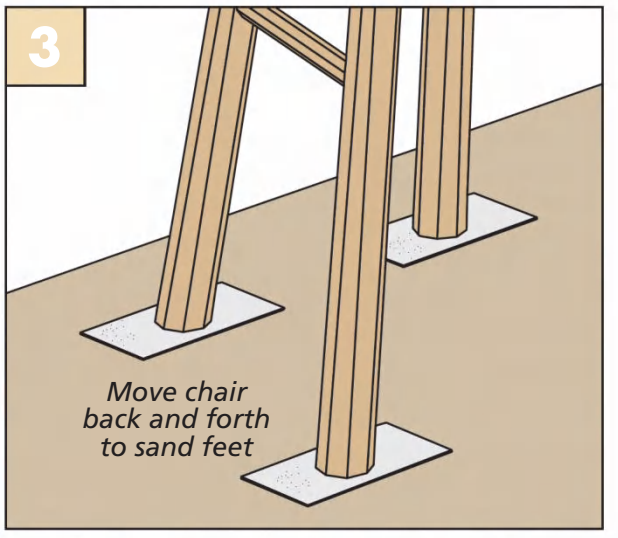

Smooth Feet. Use four strips of adhesive-backed sandpaper attached to your workbench to smooth out the feet.

Double check the left and right lean, you'll want this to be level.

MARK THE CUT. With the chair leveled, use a pencil on a block to draw a line all the around each foot (Figure 1). This will be the cut line. Use a hand saw to trim each leg (Figure 2). The final leveling can be done by placing adhesive-backed sandpaper on a bench and sliding the chair back-and-forth over it. Then, ease the edges of the feet with sandpaper to avoid chipping over time.

A BEAUTIFUL FINISH. I wanted to use a special finish for this project. So, I decided to ebonize the chair. The ebonizing is easily done by first using a wash of strong tea (or tannic acid) to add tannins to the surface of the wood. Then I dissolved some steel wool in vinegar. After sanding back the grain, I applied a coat of the vinegar solution to the chair.

The ebonizing reaction is almost instant — the wood starts to darken immediately. You can repeat this process to get the chairs as dark as you'd like. For a video on ebonizing, visit *Woodsmith.com*. After everything dries, I sanded through a few of the areas for an aged look before topping it with spray lacquer.

In chairmaking, you can't get much simpler than staked construction. After you build this first chair, you'll be well on your way to making an entire set for your home. W

Materials, Supplies & Cutting Diagram

A	Seat Blank (1)	1½ x 16½ - 20	**D**	Front Spindles (4)	¾ x ¾ - 12⅞	**G**	Bridge Blank (1)	1 x 4⅞ - 15
B	Legs (4)	1⅝ x 1⅝ - 19	**E**	Back Spindles (5)	¾ x ¾ - 11¼			
C	Stretchers (2)	¾ x ¾ - 9½	**F**	Back Rail (1)	1 x 16¼ - 29			

¾" x 4½" - 48" White Oak (1.5 Bd. Ft.)

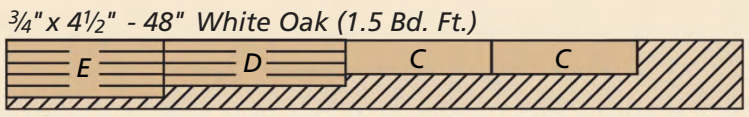

1¾" x 5½" - 96" White Oak (7.3 Bd. Ft.)

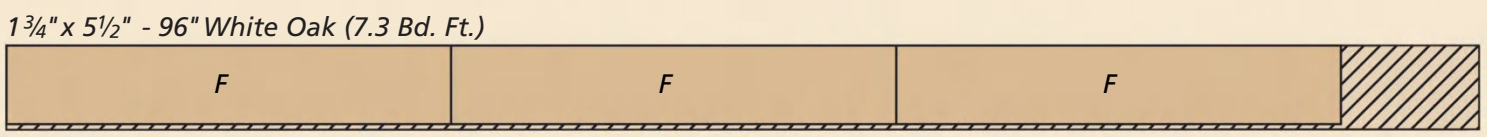

1¾" x 7" - 96" White Oak (9.3 Bd. Ft.)

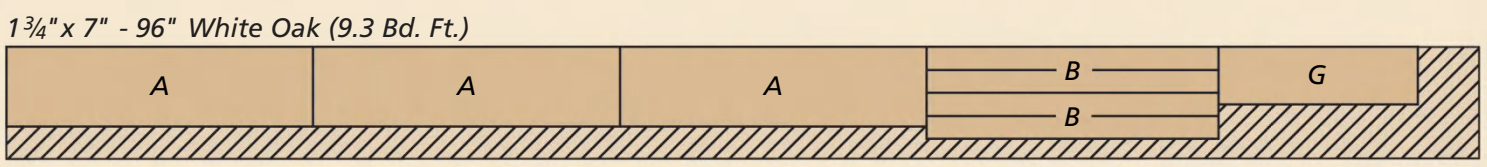

Woodsmith GO ONLINE EXTRAS

For seat and back rail patterns, go to Woodsmith.com

Smooth Curves

Curved surfaces on a project draw the eye in a way that straight lines usually don't. For many woodworkers, creating those curves only adds to the fun of building a project.

If you're still building your skills though, curves can be a bit intimidating. Personally, I've found it helpful to follow a four-stage path. Each step along the way has a clear goal that guides the step that follows.

One quick side note: This is the approach I take when a project calls for a unique shape. If a specific shape repeats across multiple parts of the project, I typically create a template first. Used with a router, the template helps to create the shape with speed and consistency.

LAY OUT CURVED SHAPES

Before you hit the road, you need a map to guide the journey. The map in a project is the layout. And the clearer the better. The lower left photo highlights the tools I turn to most often.

Simple curves are often formed from the radius of a circle. So a compass or circle template is all you need. For more complex

The flowing contours of French curves allow you to blend curves and radii into smooth, flowing lines. A drawing compass, a beam compass, and circle template (left) easily handle simple profiles.

Written by: Phil Huber

curved profiles, I usually turn to a set of French curves. These help you blend shapes together into a seamless whole.

Mark the lines with a pencil. You want a single, clear line to follow. So avoid vague, sketchy marks. Errant marks should be erased or sanded away completely to avoid confusion.

FORMING CURVES

Perhaps the biggest pitfall woodworkers face when creating curved surfaces is hastiness. It's nearly impossible to hit the layout lines and get a smooth, flowing curve in one go. Instead, I use the remaining three stages to gradually work closer and closer to the final shape — using the appropriate set of tools.

Forming the curve begins with removing as much of the waste as possible in an efficient manner. The tool you use depends on the size of the workpiece.

JIG SAW. It's often easier to bring the tool to the workpiece when parts are large (an admittedly subjective call). A jig saw works best, as in the upper right photo. On curves, take care to let the saw do the cutting, otherwise the blade may deflect and go past your layout marks.

BAND SAW. I turn to the band saw for most curve cutting if the part is small enough to comfortably balance on the saw table, as in the lower photo at right. The blade is better supported above and below the workpiece so it isn't likely to wander.

With both of these tools, cut on the waste side of the layout lines. Ideally, you want to leave an even amount of waste along the lines, just not beyond. Once you cut past your line, you have nothing to guide you during the following steps.

REFINING THE SHAPE

This next stage balances speed with precision. There's still a good amount of material to remove, but the risk of taking it too far is greater.

A spokeshave, rasp, and file form a tough-to-beat trio in my shop (top photo on the previous page and the lower left photo below). When using these tools, focus your attention on the places that are farthest from the line.

As you remove material, the idea is to blend the surfaces into a flowing curve. It may not feel the smoothest at this point. But your aim is to be free of noticeable flats and bumps.

SMOOTHING THE CURVES

Taking care of business in the two previous steps should mean that the final step — smoothing — goes quickly. Removing tool marks is the name of the game. A card scraper and sanding tools get the job done. On inside curves, I like using a sanding drum in the drill press, as shown in the photo below.

The key is saving sanding for the last possible step — getting a finish-ready surface. And frankly, reducing sanding makes the process more enjoyable. W

▲ A jig saw blade with ten or more teeth per inch cuts smoother (top). Attach a pivot fence to the band saw table to create curved parts with parallel sides (bottom).

▲ Rasps have aggressive teeth that quickly remove waste. For smooth curves, avoid working in one area. With each stroke of the tool, move along the edge of the workpiece, too.

▲ When using a drill press sanding drum, select the largest size you have that will still fit the shape you wish to create. This will reduce the risk of creating flat spots in the curve.

Setting up Your Chisels

The first thing many woodworkers focus on when they get a set of chisels is sharpening the edges. While a sharp edge is important, I've found that it's better to start by completing a few more setup tips before I get to any sharpening. This way, sharpening the edge becomes an easier process. Plus, I get better use and more enjoyment out of my chisels.

One of the first things I do before I get started is to give each chisel a once-over. I look for the obvious things, like nicks or gouges in the handle or blade, or really bad grind spots on the blade of the chisel.

These problems aren't likely if you're buying a new set of chisels. But second-hand chisels can be a little rough, so it pays to search out the best you can so you aren't starting out with a chisel that's in rough shape.

Written by: Bryan Nelson

REMOVE THE COATING. The next step is to take care of removing any coatings on the chisel. Manufacturer's want them to look their best, so to keep the rust at bay, the blades are often coated with lacquer. The nice thing is, it's a simple process to remove it. All you need is some lacquer thinner and a glass jar, as in the main photo on the opposite page.

After filling the container, let the blades of the chisels rest in the thinner to dissolve the lacquer. You'll find it won't take long. Any tough spots can be taken care of with a non-woven abrasive pad (main photo). You have a choice with the next step, and that's whether to remove any finish on the handle.

Of course, if the chisels have plastic handles, there's nothing to take care of. But wood-handled chisels are finished to make them look nice. Unfortunately, that look creates a problem. The chisel can feel a little too much like plastic and be a bit slippery. I prefer to remove the finish and get to the natural wood below. If the finish is lacquer, the process is the same as with the blades — lacquer thinner.

If it doesn't come off with the thinner, then it's most likely something a bit tougher to deal with. A stripper would take care of it, but I've found that a little sanding often removes the finish without the mess.

ADD PROTECTION. Once you're down to bare wood, it's time to add some protection back. For this, I like to use boiled linseed oil, as shown in the photo at right. It provides protection and gives the handle a nice look but doesn't build up. A couple coats is all it takes to provide the right look and feel.

SOCKET CHISELS. There's one last thing I like to take care of when I'm dealing with a socket chisel, like the ones you see here. The tip of the handle of a socket chisel is tapered at the end to match the socket at the top of the blade. It needs to mate perfectly for the handle to stay firmly attached.

This taper may be too smooth or still have a factory finish on it. So, I start by removing the handle. To do this just hold the blade of the chisel (with edge protector on) and give the handle a rap against the top of your bench.

Applying a couple of coats of boiled linseed oil to a chisel handle provides protection, a natural look, and a good grip without the feel of a heavy film finish.

It should pop right off. Then, lightly sand the taper with some 150-grit sandpaper to remove any finish or rough spots and give the taper a little more grip.

Reinstalling the handle is about as simple as it gets. Just slip the taper of the handle into the socket and rest the blade on a block of wood. Then strike the handle with your mallet a couple of times to seat it in place.

A light sanding (photo above) on the taper of a socket chisel handle will ensure a good bite when re-attaching it to the blade. A couple firm taps is all it takes to seat the handle (photo at right).

Illustrations: Bob Zimmerman

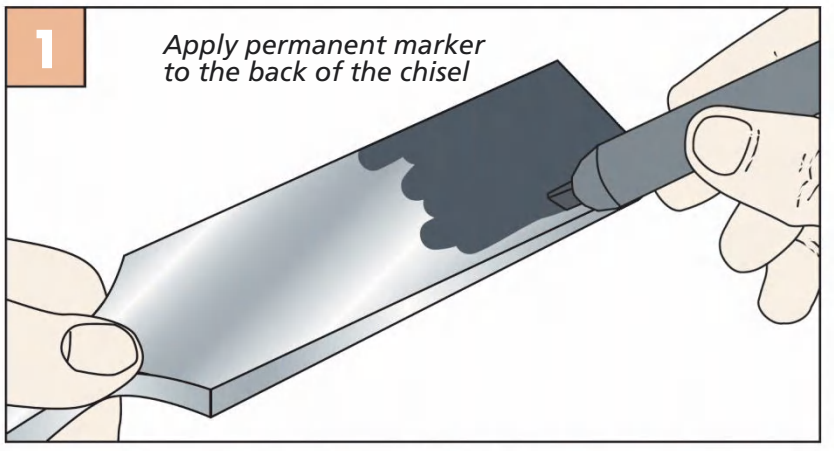

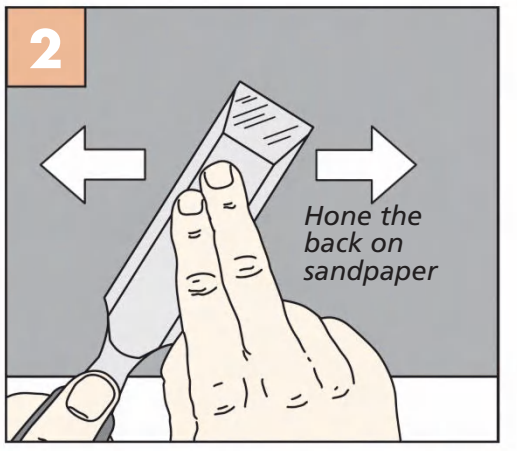

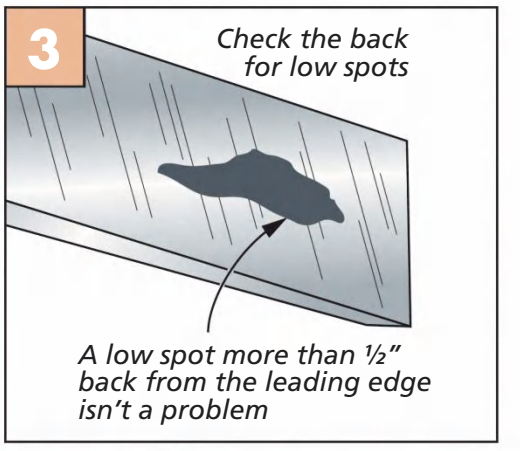

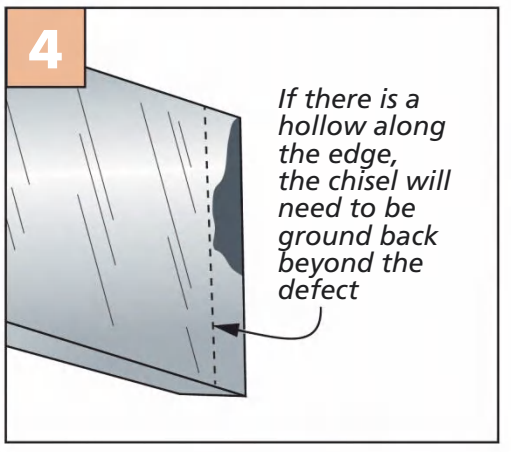

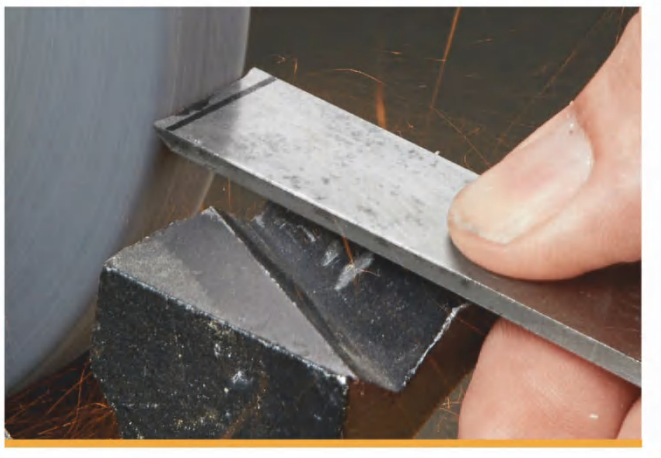

◄ Hold the chisel 90° to the wheel in order to grind away a hollow near the leading edge. Be sure to check the edge often to keep it from overheating, allowing it to cool as needed.

The next step in setting up the chisel is to provide the foundation for creating a razor-sharp cutting edge. You can spend all day sharpening the bevel of a chisel, but you'll never get a truly sharp edge on any chisel unless you take care of flattening the back. It needs to be flat and smooth for great results.

If you take a look at the back of most chisels, you'll see a series of grinding marks from the manufacturing process. You might think this creates a flat back, and while it may, it certainly isn't as smooth as it needs to be. So there's work to be done. There are many opinions on how flat or even how much of the back really needs to be flat. The technique and tools that follow have worked well for me and provide a good compromise between time, effort, and results.

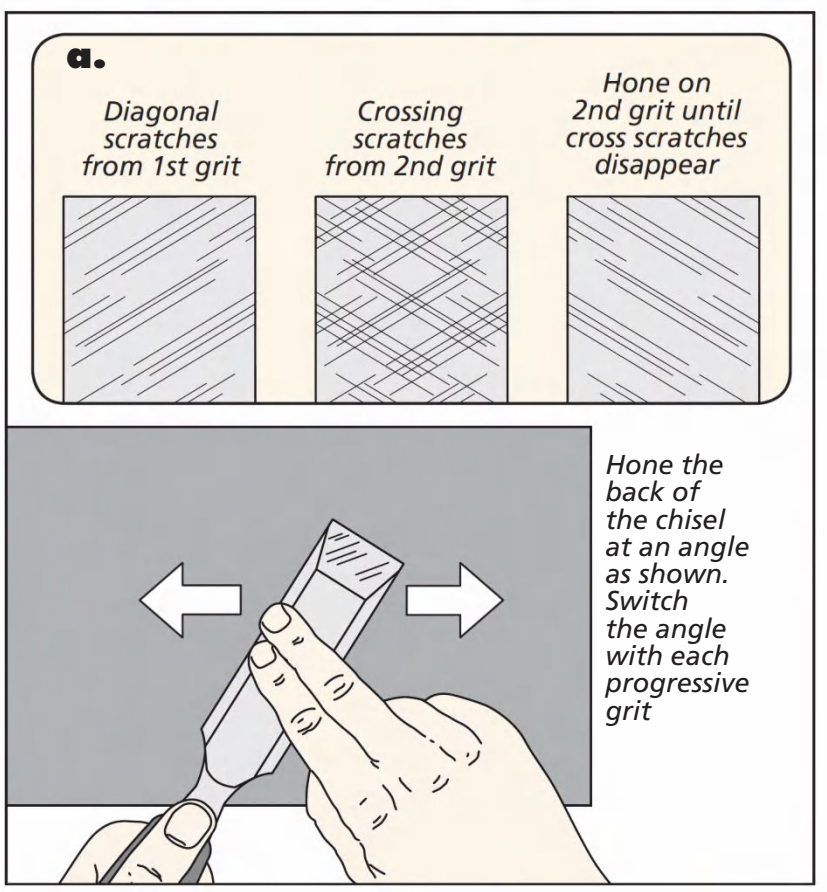

CHECK THE BACK. The first step is to see where you're starting from. For this, I take a permanent maker and color the back for 2" or so from the leading edge, as illustrated in Figure 1.

Since you don't really know how flat the back is at this point, I find it best to use something around 1500-grit to avoid putting deep scratches into a back that might be pretty flat to start with. I use a light coat of spray adhesive to attach the sandpaper to a piece of plate glass.

Pressing down firmly on the chisel, make a few passes back and forth (Figure 2). Turn the chisel over and check the scratch pattern. Ideally, the marker will be worn away to reveal even scratch patterns across the back. But it's not unusual to find a low spot or two (Figure 3).

EVALUATE THE RESULTS. I'm not concerned about hollow areas that are ½" or more from the edge. What's important is having the back flat just behind the leading edge and along the sides of the chisel. In Figure 4 you can see an area along the leading edge that's hollowed. Trying to flatten a chisel with this condition is a lot of work. Here it's best to grind the edge back and remove the problem, as detailed in the photo above.

COMPLETE THE PROCESS. Now that you know the starting point, it's time to complete setting up the back. While the 1500-grit sandpaper was fine for checking the condition of the back, it's likely you can still see some of the original grind marks on the back of the chisel. To remove them and get to a polished back, you'll need to drop down to a more aggressive grit. Most of the time, I've found that starting at 180-grit works well.

Just like before, attach the sandpaper to your plate glass and work the back of the chisel diagonally across the sandpaper

Grind down the heavy flats along the chisel sides with careful work using a rotary tool and an abrasive stone.

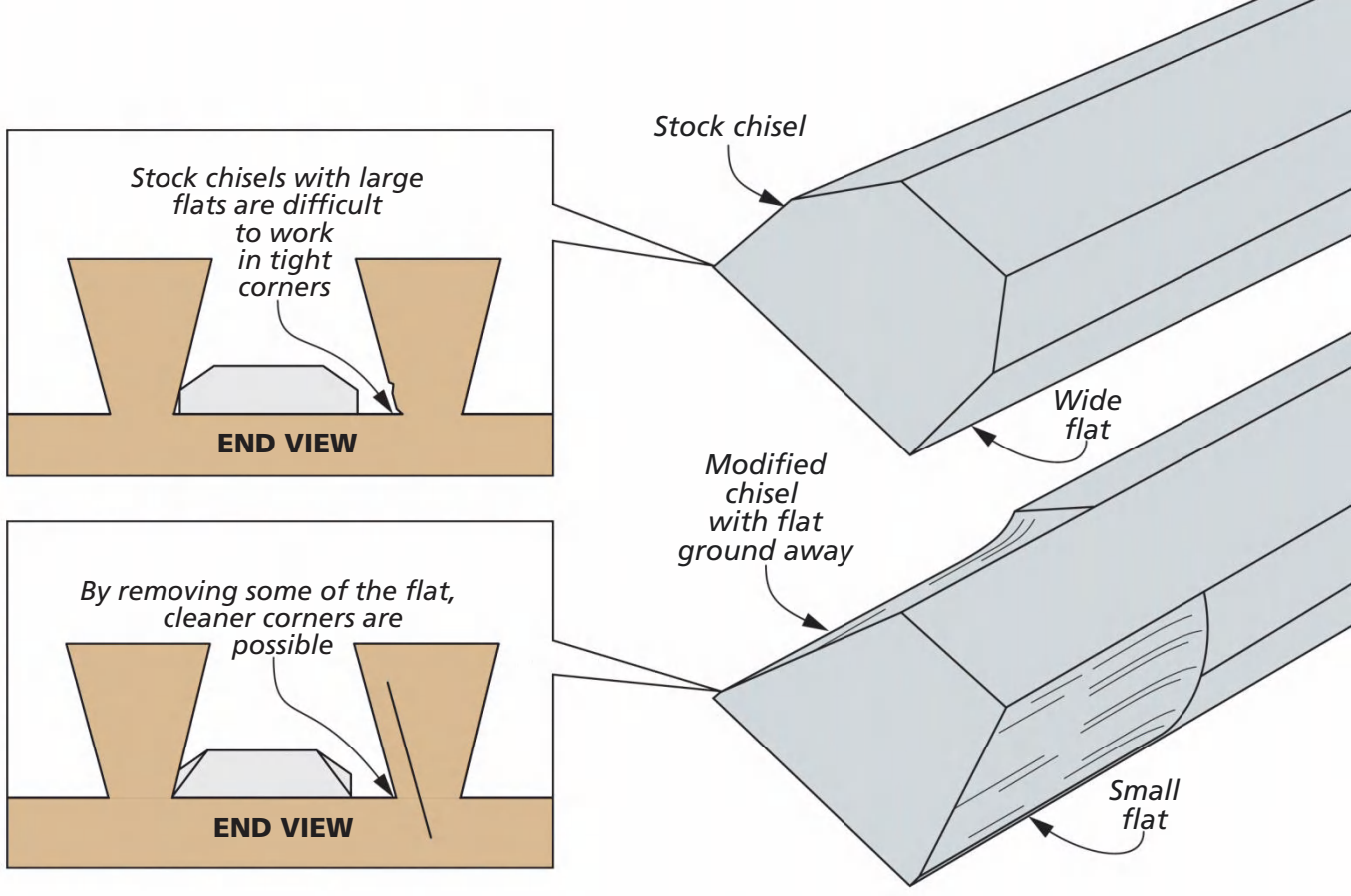

(lower drawing on previous page). Work until the original grinding marks are gone and you see a series of consistent diagonal scratches across the back (detail 'a').

Once you see a consistent pattern, switch to the next finer grit and repeat the process. This time, switch the angle to make it easy to see your progress (center art in detail 'a' on previous page). You'll work this angle until the scratch pattern changes to the opposite direction.

FINAL POLISHING. To complete the process, you'll keep working through a grit progression until you have the back polished to your liking. For me, this means working until 2000-grit, since that sandpaper grit is fairly easy to find. You could, of course, continue into finer grits using other sharpening media. But I find 2000-grit provides the results I'm looking for.

ONE LAST OPTION. There's one last optional thing I'd like to cover regarding setting up a chisel. If you'll be creating a lot of hand-cut dovetails, you may want to consider it. And that's to modify the sides of any chisels you use for your dovetail work.

Many chisels have significant flats along the sides, like the upper chisel in the margin at right. This makes it almost impossible to get into the corners of a dovetail to clean out the waste (top drawing above). And if you're not careful, the top corner can ding the dovetail which will show after assembly.

By removing material along the sides, you can shorten the flat and provide extra clearance, as shown in the lower drawing and detail above. This makes it a snap to clean out the waste with ease, like you see in the photo below.

GRIND IT AWAY. To remove the excess material, you can use a bench grinder. But I find that a bit challenging to control since it's hard to see what's happening as you work. I've had better luck using a rotary tool with a grinding wheel (photo above).

By taking your time, you can change the side bevels and bring them down closer to the back of the chisel. Leaving a small flat ensures you don't change the width of the chisel, but still provides the necessary clearance to get into the corner. I wouldn't do this to every chisel, just the ones I use most often for cleaning out dovetail waste.

At this point, the basic chisel setup is complete. All that's left is to sharpen the bevel. Here you can use whatever sharpening media, tools, and process you prefer. But you can go into it knowing the outcome will be a top-performing tool. W

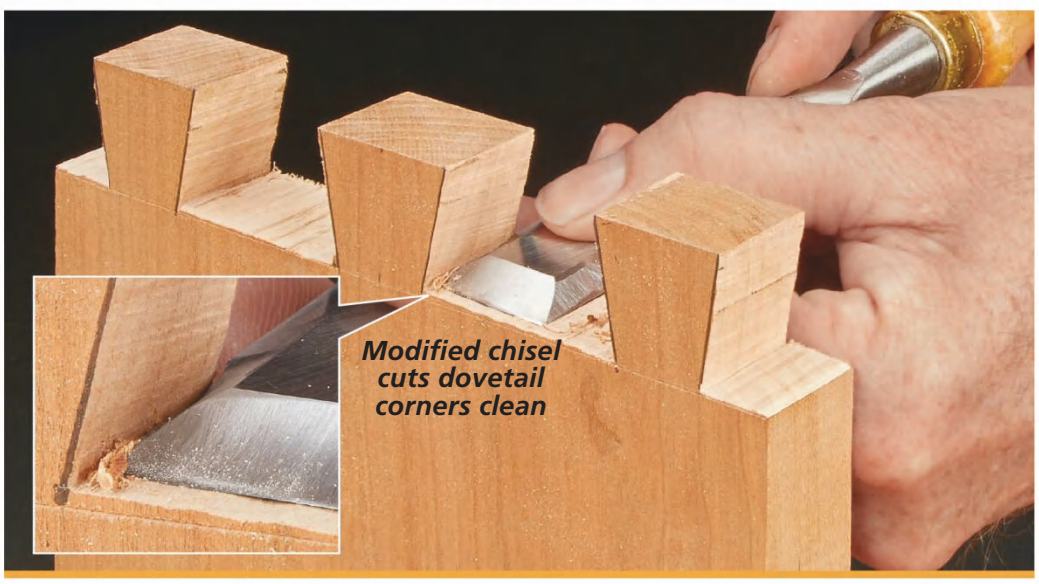

With the sides of a chisel ground down to a smaller flat, getting into the corners of a dovetail to remove waste is easy. Plus, there's little worry about damaging the dovetail by nicking the edges with the chisel.

Circular Cuts on the Table Saw

When it comes to making perfectly straight cuts in a workpiece, whether ripping or crosscutting, the table saw is hands down the tool of choice for most woodworkers. But with a little ingenuity, the table saw can also be pressed into service for making circular cuts or to create round pieces. Here's a quick look at three simple techniques for making circular cuts.

SPIRAL CUTS

Spiral table legs are commonly used in period-style furniture. In a home shop, these legs are typically shaped by hand using a combination of gouges, rasps, and files. But the initial spiral pattern can be created on the table saw by passing the round leg blank at an angle over a slightly raised saw blade, as shown in the photo above.

The process starts by attaching a long auxiliary fence to your miter gauge. Then angle the head of the miter gauge to approximately 75°. (Increasing the angle creates a tighter spiral.)

Set the blade height to about 3⁄16". With your leg blank held against the miter gauge, advance the workpiece until it's directly over the blade.

Without moving the miter gauge, carefully start moving the blank along the length of the auxiliary fence. The forward motion of the blade will cause the workpiece to rotate as you slide it along the fence, creating a nearly perfect spiral.

This technique may seem a bit intimidating at first, but keep in mind that you're not removing much in the way of material. Still, it's a good idea to practice on some dowel stock first.

ROUND WORKPIECES

Cutting a large circle, say for a tabletop, is typically a job for a band saw or jig saw. But if you don't have either of those tools, the table saw can be used instead.

To do this, you'll need to make a sled to carry the workpiece. This can be as simple as piece of plywood with a hardwood runner attached to fit in the miter gauge slot of your table saw.

Written by: Vincent Ancona

To cut a large, round workpiece on the table saw, start by using a sled with a pivot pin to trim the corners of the blank. Then, carefully rotate the blank into the spinning blade to clean up the outside of the circle (inset).

A pivot pin made out of a short piece of ¼" dowel stock is glued into a hole in the top of the sled. The distance from the pin to the blade should equal the radius of the circle you wish to cut.

Drill a shallow ¼" hole on the bottom face of your blank and set it over the pivot pin in the sled. To create the circle, start by cutting off the four corners of the blank, as shown in the photo above. Then make additional straight cuts, rotating the workpiece slightly between each pass, to remove the bulk of the remaining waste.

The final step is to clean up the outside of the circle by pushing the sled forward and stopping when the edge of the blank meets the front of the blade. Then, slowly rotate the blank into the blade to clean up any remaining waste, as shown in the inset photo above.

Creating round tenons on the table saw is easy using a jig that cradles the workpiece as you rotate it over the spinning blade. Stop blocks position the workpiece directly over the blade and establish the tenon shoulder.

ROUND TENONS

A third instance where the table saw can be used for making round cuts is in creating round tenons on the end of a workpiece. To do this, all you need is a jig to cradle the workpiece, like the one you see at left.

The jig consists of a base, a back, and a pair of supports with holes that are sized to just fit the workpiece. By rotating the workpiece while it rests in the jig, you can create perfectly round tenons. A pair of stop blocks taped to the saw table position the workpiece over the blade and establish the length of the tenon.

Granted, these tricks are probably not ones you'll use every day. But they go to show that with some creative thinking, you can extend the useful range of your table saw. W

Drill Press Hold-Downs

I just finished making the drill press table from ShopNotes No. 38 (available on WoodsmithPlans.com). I wanted to know if you had any advice on where to drill some holes in the top for threaded inserts to accommodate some hold-down clamps.

I believe it would greatly improve the material handling capabilities of the table. I'd like to be efficient with the holes, so it doesn't turn the top into Swiss cheese.

Jim Thompson
via the internet

There's a two-pronged approach you can take to locating the holes. The first part is to drill one or two to start with and use the table for awhile to get a feel for how and when you need to employ the hold-downs. Then you can drill more as you see fit.

FIRST HOLE. But how do you know where to drill the first set? I'd locate these on the left side of the table (opposite the handle). This way, the hold-downs won't interfere with lowering the bit — especially when you're drilling thin pieces with short bits.

One hole should be located so the end of the hold-down is within a couple inches (or so) of the centerpoint of the bit. This increases safety for drilling small pieces and focuses clamping effort near the drilling action — keeping your fingers clear of the bit and improving accuracy.

SECOND HOLE. Then I'd drill another hole farther out (6" or so). But here, position the hole so the end of the hold-down can reach to an imaginary line that runs parallel with the front of the table and along the centerpoint.

ADDITIONAL HOLES. If you like, repeat this setup on the right side of the table, if you don't think the hold-downs will get in the way. Over time, you may find that you'll need another row of holes (or just one or two) nearer the front edge of the table. But like I said, I'd wait to see how things work. W

Written by: Phil Huber

hardware & supplies
Sources

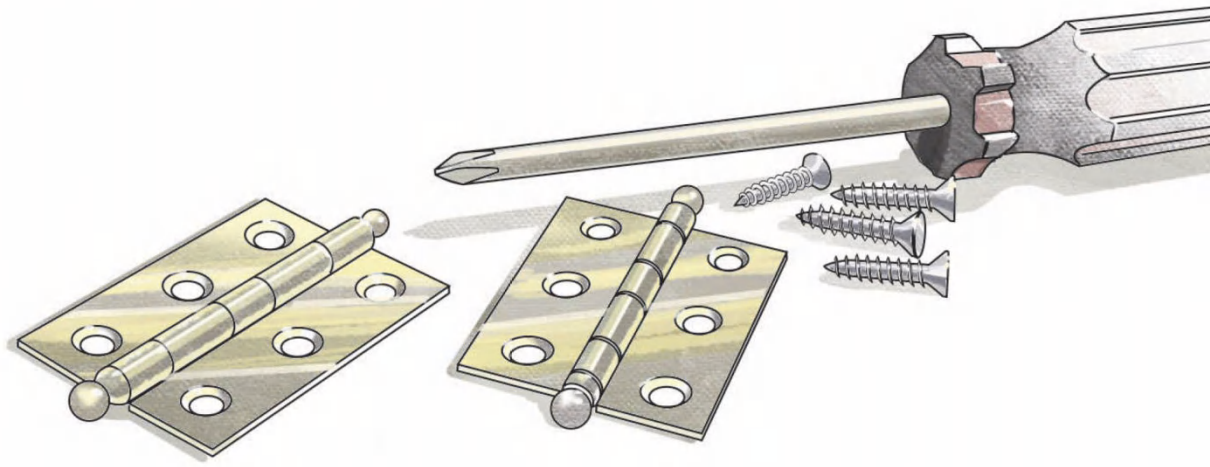

Most of the materials and supplies you'll need to build the projects are available at hardware stores or home centers. For specific products or hard-to-find items, take a look at the sources listed here. You'll find each part number listed by the company name. See the right margin for contact information.

SHAPER ORIGIN *(p.10)*

- **Shaper Tools**
  Origin

GLOVES IN THE SHOP *(p.18)*

- **Lee Valley**
  Chain Mail Glove . . . . . Varies
  Finger Guards . . . . . Varies
  Anti-Vibration Gloves . . . Varies
- **Amazon**
  Gloves In A Bottle . . B000UBN5S8
  Workman's Friend . . B079SL3XFR
  Ghost Glove B00PC6SUL8
  Nitrile Gloves . . . . . Varies

ROUTER PLANE *(p.28)*

- **McMaster-Carr**
  ¼"-20 Inserts 92105A100
  5/16"-18 Inserts 92105A410
  Square Tubing 6527K154
  Knurled Knob 90200A546
  Ball Knobs 60975K82
- **Lee Valley**
  ⅛" Blade 05P38.24
  ¼" Blade 05P38.03
  ½" Blade 05P38.04
  ½" Spearpoint Blade . 05P38.05

A few coats of wiping warnish are all the router plane needs before it's ready for action.

STANDING MIRROR *(p.32)*

- **Rockler**
  Shaker Pegs 21964
  FO 26mm Hinges 38385
  Brass Turn Buttons 27912
  ¼" Shelf Pin Sleeves 81836
- **McMaster-Carr**
  ⅜"-Brass Inserts 90016A031
  Brass Rod 8953K124
- **Horton Brasses**
  Cherry Knob WK-5

The mirror for the door was purchase from a local glass glazer. The standing mirror was stained with *Varathane* "Traditional Cherry" gel stain. Then, I sprayed on a couple coats of clear lacquer.

CANDLE HOLDER *(p.40)*

The glass candle holders were purchased at a local craft store. The finish on the maple and cherry holders started with a coat of *General Finishes* "Seal-A-Cell". The white oak holder was stained with *General Finishes* "Java" gel stain. Then, I sprayed on a couple coats of clear lacquer on all the holders. The oak holder had *Briwax* Liming wax applied over the lacquer.

WELSH STICK CHAIR *(p.44)*

- **Woodcraft**
  Holy Galahad Disc 149993

SMOOTH CURVES *(p.56)*

- **Crucible Tool**
  Design Curves
- **Amazon**
  Circle Template B000KIBQ46

MAIL ORDER SOURCES

Project supplies may be ordered from the following companies:

amazon.com

Crucible Tool
lostartpress.com

General Finishes
800-783-6050
generalfinishes.com

The Home Depot
800-466-3337
homedepot.com

Horton Brasses
800-754-9127
horton-brasses.com

Lee Valley
800-871-8158
leevalley.com

McMaster-Carr
630-833-0300
mcmaster.com

Rockler
800-279-4441
rockler.com

Shaper Tools
888-281-1012
shapertools.com

Woodcraft
800-225-1153
woodcraft.com

RAZOR-SHARP EDGES in 5 Minutes!

The *Woodsmith* Cabinet Scraper System offers a fool-proof method for getting a consistent, razor-sharp edge using only a few simple tools. The secret is in the *Woodsmith* jig — a unique tool that lets you file the edge and then create the bur.

Item# 7512124
Woodsmith Cabinet Scraper System $59.99
https://store.woodsmith.com/product/cabinetscraper

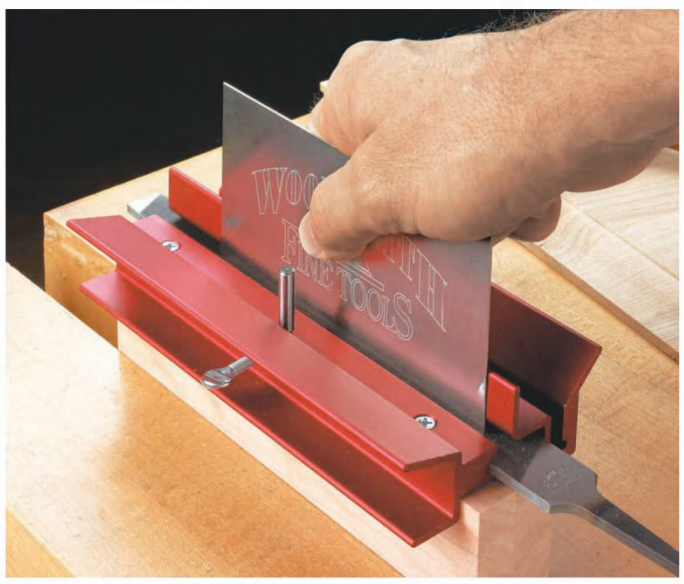

classified Marketplace

Square Holes? No Problem!
Charles G.G. Schmidt & Co. Has the Answer
Hollow Mortising Chisels & Bits
Super Sharp High Quality Carbon Steel

See all of our Tooling and Accessories in Catalog No.1200

7 Square Sizes
1/4", 5/16", 3/8"
1/2", 5/8", 3/4", 1"

2 Rectangular Sizes
3/8" x 9/16"
3/8" x 5/8"

Buy on line or call:
800-SCHMIDT (724-6438)
www.cggschmidt.com
Charles G.G. Schmidt & Co. Inc.
Montvale, NJ
SCHMIDT

Pin and Pinless Moisture Meters
Accurate, Durable, Reliable
Call and order today for an addtl 10% discount, code WS.

The Woodworkers Choice
- Lignomat meters are used by woodworkers from drying lumber to selecting lumber for a new project, ...
- To avoid shrinking, cupping, warping: Use a meter and check before you start if the wood is dry.

Call today
800-227-2105
Lignomat USA
www.lignomat.com

WOOD FILLER
SUPER MET-AL
FLOOR REPAIR STICK
For:
Wood
Concrete
Laminate
Vinyl Floors
FOR FREE SAMPLES
1-800-851- 8464
www.skmproducts.com

microfence.com
800-480-6427

Details, Details, Details...

Woodshop News presents
WOODWORKERS SHOWCASE
A new Marketing site connecting professional woodworkers with qualified buyers

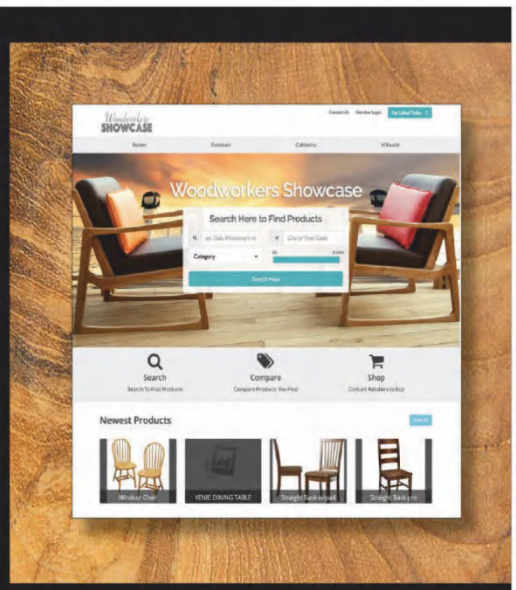

Woodshop News introduces Woodworkers Showcase, a new website where artisans, furniture, cabinet and architectural millwork shops can market their work to an established audience of high-end buyers.

Woodworkers Showcase's primary audience are readers of other Active Interest Media (publisher of *Woodshop News*) titles, such as *Craft Homes*, *Old House Journal*, *Log Home Living*, *Period Homes*, *Power & Motoryacht*, *Yachts International*, *Soundings*, *PassageMaker*, *Sail*, and *Angler's Journal*. These readers know and understand that quality products are worth it.

sales@woodshopnews.com

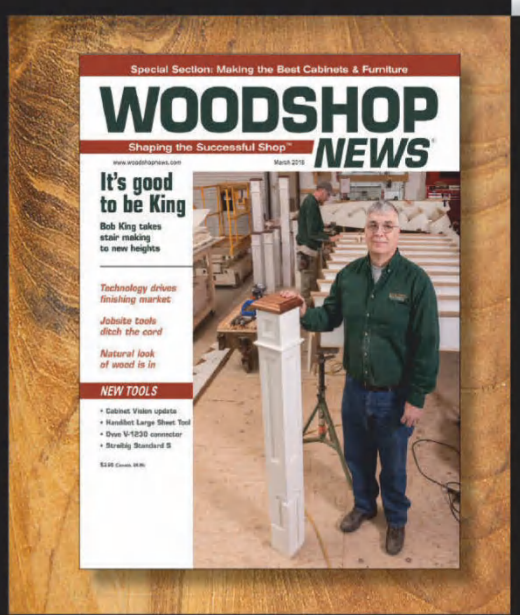

THE MARKETING OF THIS SITE WILL COVER
COMBINED REACH

Total print & digital distribution
OVER 2 MILLION MONTHLY

Total monthly web site page views
OVER 2.5 MILLION MONTHLY

Average House Hold income
$193,744

https://www.WoodworkersShowcase.com/

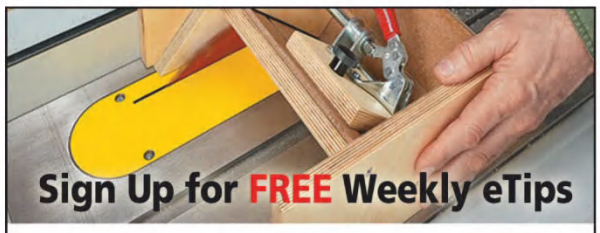

Sign Up for FREE Weekly eTips

- Get a video tip sent to you every week
- Includes a printable, step-by-step tip
- Ready when you are — on any device

Sign up today at Woodsmith.com

KLINGSPOR
#1 Online Source for Klingspor Abrasives
KLINGSPOR'S WOODWORKING SHOP ANNIVERSARY
30 YEARS
SERVING WOODWORKERS SINCE 1989
KLINGSPOR'S WOODWORKING SHOP
"Quality Tools and Supplies for the Woodworker"
800-228-0000
www.woodworkingshop.com

Changing the way you work with your router.

FREE Shipping! Call 800-533-9298.

CABINET MAKER ROUTER BIT SET

TRACK SAW SYSTEM

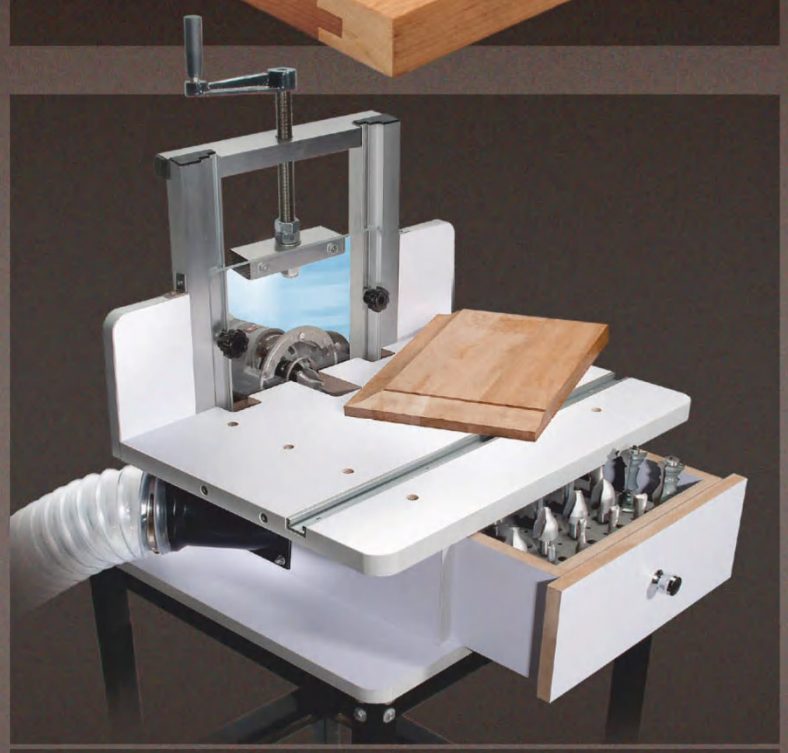

HORIZONTAL ROUTER TABLE

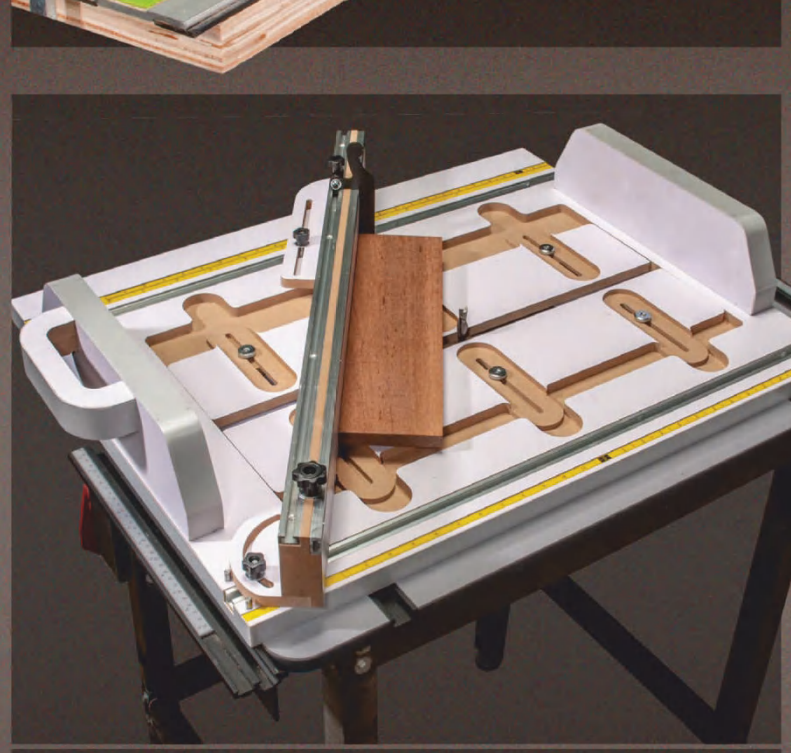

ZERO CLEARANCE CROSSCUT SLED

MLCS

mlcswoodworking.com

SMALL IN SIZE BIG ON PERFORMANCE

INTRODUCING THE NEWLY UPGRADED 1020 BENCHTOP DRUM SANDER

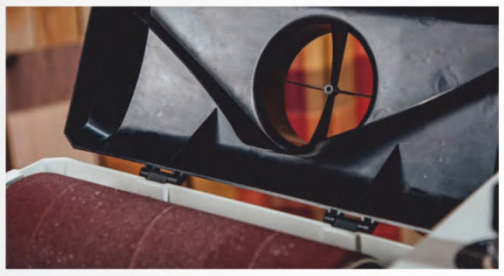

EFFICIENCY
Patented Dust Hood Collects 97% of all Dust* for a cleaner sanding experience.

*When paired with a JET Cyclone Dust Collector

PERFORMANCE
Powerful 1HP motor with Variable Speed Conveyor for smooth and controlled sanding.

CAPACITY
Benchtop sander finishes boards up to 3" thick and 20" wide.

FOR MORE INFORMATION AND TO FIND A DEALER NEAR YOU VISIT JETTOOLS.COM/DRUMSANDERS

550+ SERVICE CENTERS NATIONWIDE | INDUSTRY-LEADING WARRANTIES | EXPERT TECHNICAL SERVICE

@JET.WOODWORKING @JET_WOODWORKING @JET.WOODWORKING

JPW INDUSTRIES

JET
STAND BEHIND YOUR WORK™

Sign Up for Free Weekly eTips

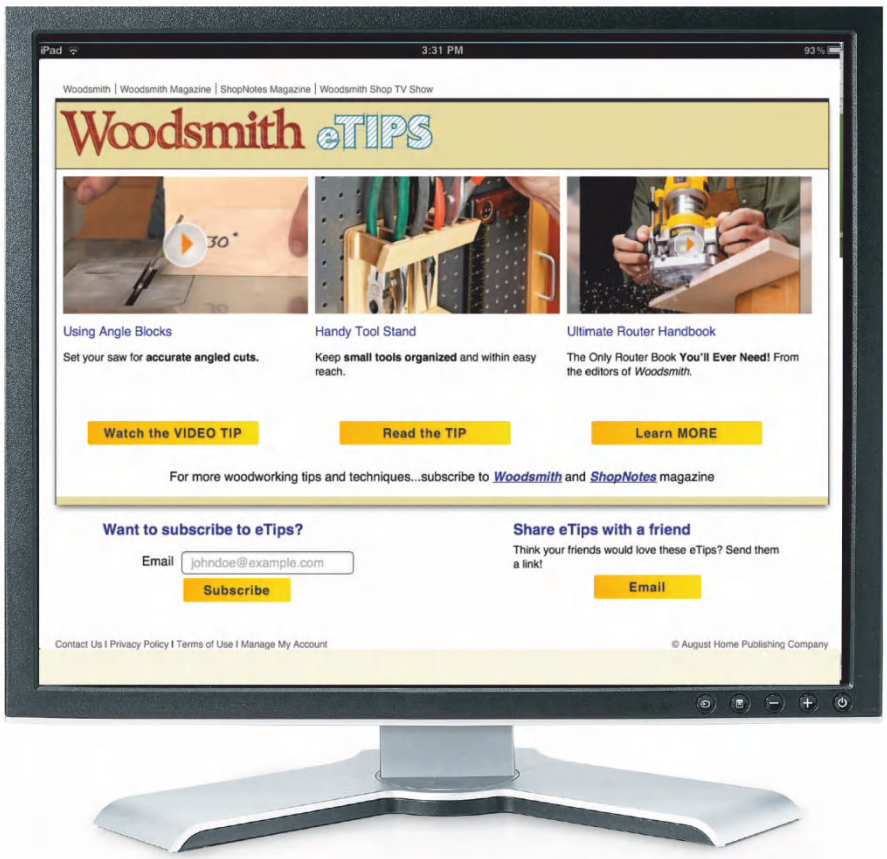

Desktop

- Get a video tip sent to you every week
- Includes a printable, step-by-step tip
- Ready when you are — on any device

Laptop

Tablet

Smartphone

Sign up today at Woodsmith.com

Woodsmith

Back Issue Library **Online**

An Incredible **VALUE!**

- ✓ Access every issue of Woodsmith ever published — over 228
- ✓ Get over 4,000+ projects, tips and techniques.
- ✓ Enjoy instant online access on your computer, laptop — even tablet.

LEARN MORE at www.woodsmithlibrary.com